X-RAY 18R

VACUUM SOLAR COLLECTORS

PERFORMA — III° INCORPORATED PIPE

BASIC — 2 PIPES

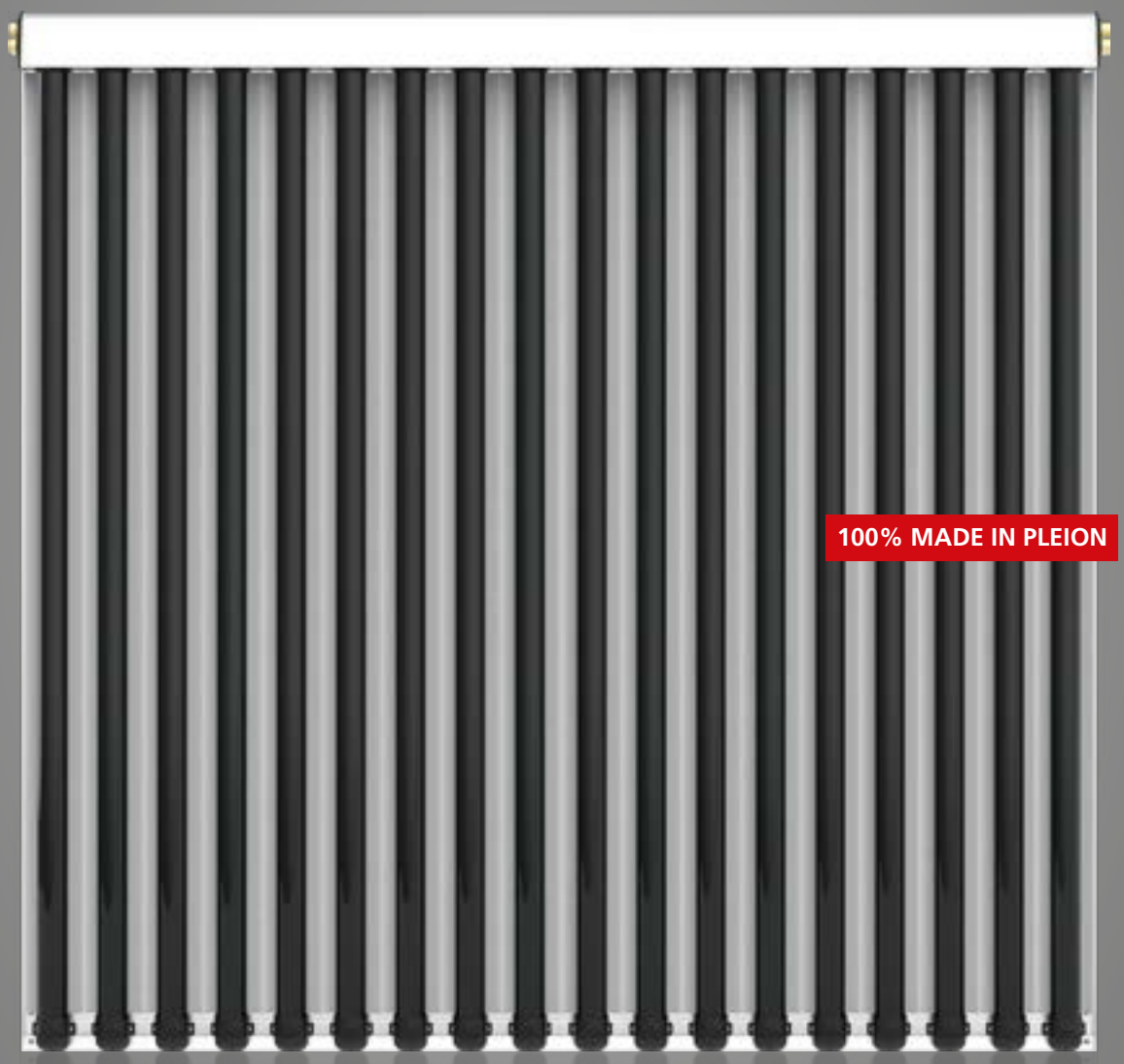

COLLECTOR WARRANTY 5+5 YEARS *EXTENDABLE

PIPE WARRANTY 10 YEARS ANTI-HAIL

X-RAY 18R

VACUUM SOLAR COLLECTORS

VERY HIGH PERFORMANCE
621 kWh/m² year
Wurzburg 50°

MODERN DESIGN AND ABSOLUTELY EASY INSTALLATION

Assembly time reduced to the minimum.

CPC TECHNOLOGY

TUBES	18
Base [mm]	1986
Height (tubes direction) [mm]	1921
Thickness [mm]	114
Gross surface area [m²]	3,82
Aperture area [m²]	3,45
Absorber surface 360°	4,62
Fluid content	3,21

X-RAY 18R - PERFOMA

PARALLEL CONNECTIONS
UP TO 15% GREATER ENERGY OUTPUT

TOP PERFORMANCES IN WINTER TIME
Perfectly functioning even when the temperature drops drastically

3RD INTEGRATED PIPE
INTEGRATED PLUMBING CONNECTIONS:
THE TUBE VANISHES, AND PROGRESS TAKES OVER.

No tubes are displayed on the roof: an integrated return line is installed in the collector-header.

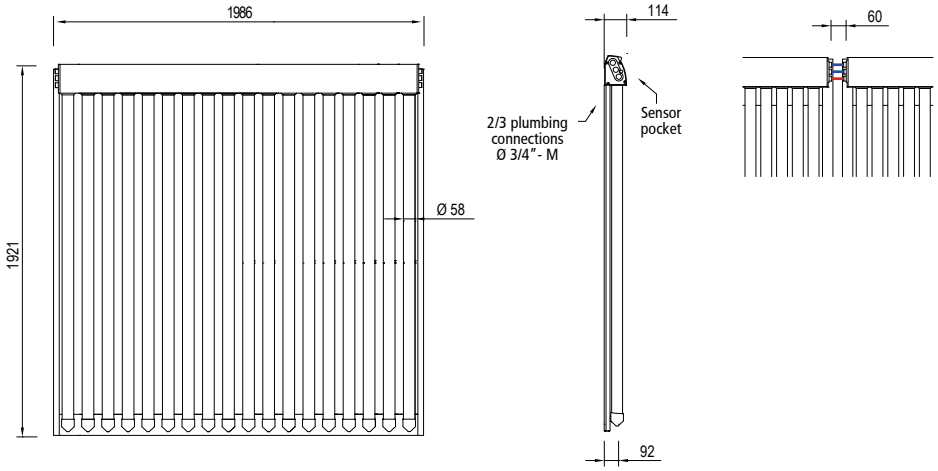

Code	Beschreibung	Pries
1010101801	X-RAY 18R VACUUM SOLAR COLLECTOR - BASIC	-
1010101802	X-RAY 18R VACUUM SOLAR COLLECTOR - PERFORMA	-

APPLICATIONS

USES

SOLAR KEYMARK Fraunhofer FLAT ROOF 45° SLOPING ROOF

X-RAY 18R

TECHNICAL SPECIFICATIONS

TECHNICAL SPECIFICATIONS		
Vacuum tubes	N°	18
Maximum number of collectors in battery	N°	4
Anchorage devices	N°	4 o 6
Dimensions of anchorage devices	Ø inch	3/4 " M
Open surface	m²	3,45
Absorption surface	m²	4,62
Gross surface	m²	3,82
Dimensions (LxHxD)	mm	1986 x 1921 x 114
Thickness of tested insulation, curved insulation in aluminised fibre glass.	mm	30
Diameter-length of vacuum tubes	mm	58/47 - 1800
Recommended inclination	°	15 - 75
Weight	kg	69,2
Content of heat-transfer fluid	litri	3,21
PERFORMANCES		
η_0 Optical yield (ref. light absorption surface)	%	61,5
k1 transmission coefficient (ref. light absorption surface)	W/m²K	0,850
k2 transmission coefficient (ref. light absorption surface)	W/m²K²	0,009
Nominal power	W	2349
Factor of angle correction incidence	K50°	1,05
Thermal capacity (ref. light absorption surface)	kJ/m²K	34
Energy produced annually EN 12975 – Wurzburg – Temperature 50°C	kWh	2371
EN 12975-2 test Report	-	RP.2018.COL.202b.1
DIN CERTCO registration number	-	16083 Rev.0 KIWA
Recommended capacity per collector	l/h	2,70
Stagnation temperature	°C	176
Maximum pressure	bar	10

POWER CURVES of X-RAY 18R collector according to change in irradiation 400-700-1000 W/m² and temperature difference.

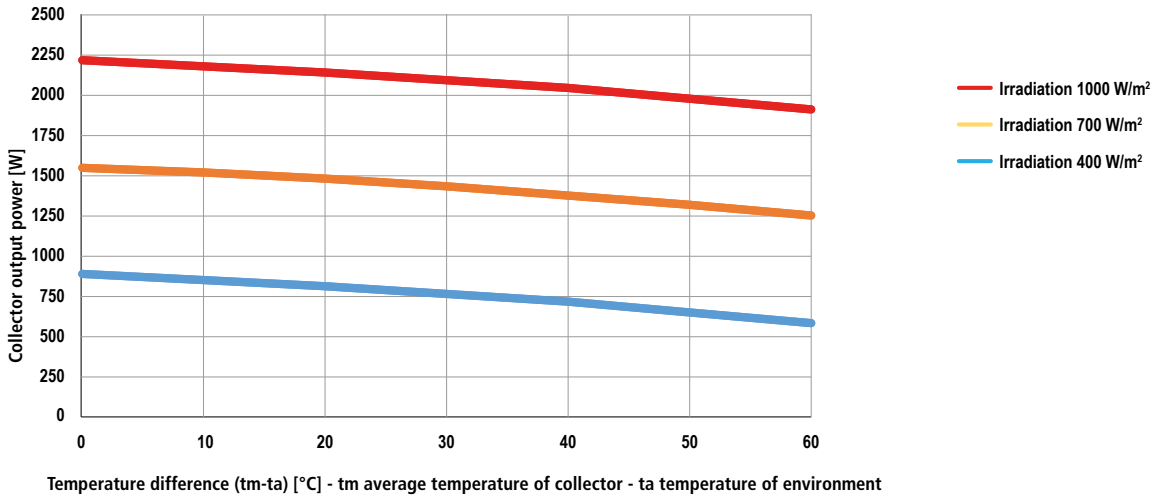

POWER P[W]			
tm-ta [°C]	**I=400 [W/m²]**	**I=700 [W/m²]**	**I=1000 [W/m²]**
0	940	1645	2349
10	904	1609	2313
20	861	1566	2271
30	811	1516	2221
40	755	1460	2164
50	691	1396	2101
60	621	1326	2031

PERFORMANCE CURVES of X-RAY 18R collector according to change in irradiation 400-700-1000 W/m² and temperature difference.

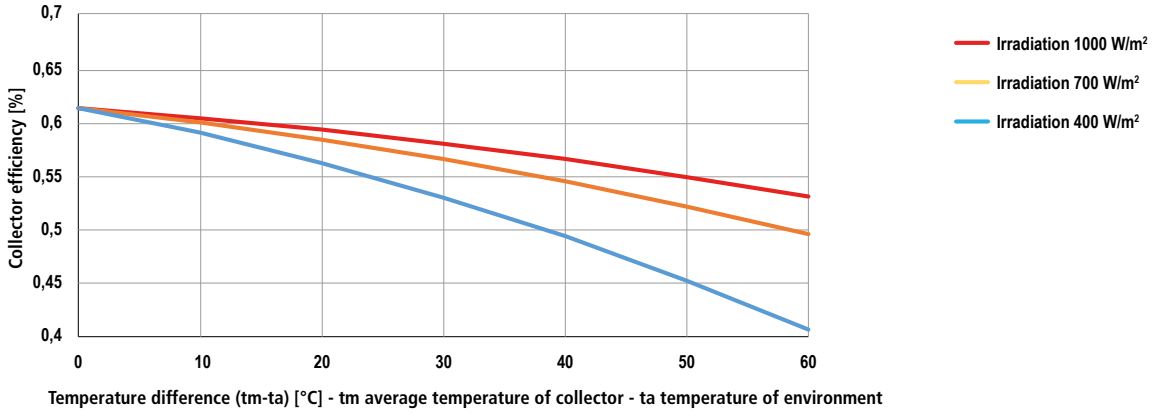

PRESSURE DROP of X-RAY 18R according to change in irradiation 400-700-1000 W/m² and temperature difference.

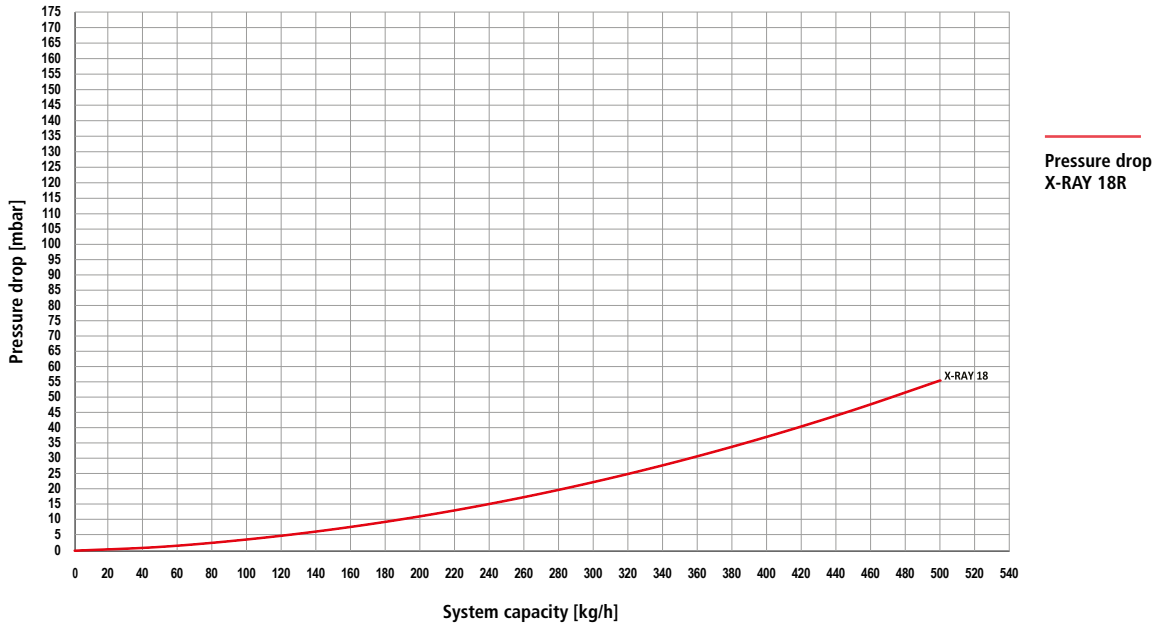

DIMENSIONING

DISTANCE [L]

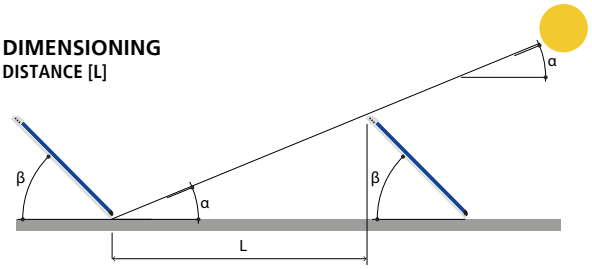

Inclination of solar rays α[°]	Inclination of solar collector β [°]		
	35°	45°	50°
15	4,1	5,1	5,5
25	2,3	2,8	3
35	1,5	2	2,2

PIPE DIMENSIONING FOR CONNECTING COLLECTORS TO THE BOILER

Number of collectors	Recommended capacity [l/h]	Pipes Cu Øe/Øi [mm]
1	165	18/16
2	330	22/20
3	495	22/20
4	660	28/25
5	825	28/25
6	990	28/25

DIMENSIONS AND MAX AREA REQUIRED*

Number of collectors	Width on sloping roof [mm]
1	1986
2	4035
3	6080
4	8125
5	10170
6	12220

* the values refer to the Pleion fixing brackets