X-RAY 15R

VACUUM SOLAR COLLECTORS

PERFORMA — III° INCORPORATED PIPE

BASIC — 2 PIPES

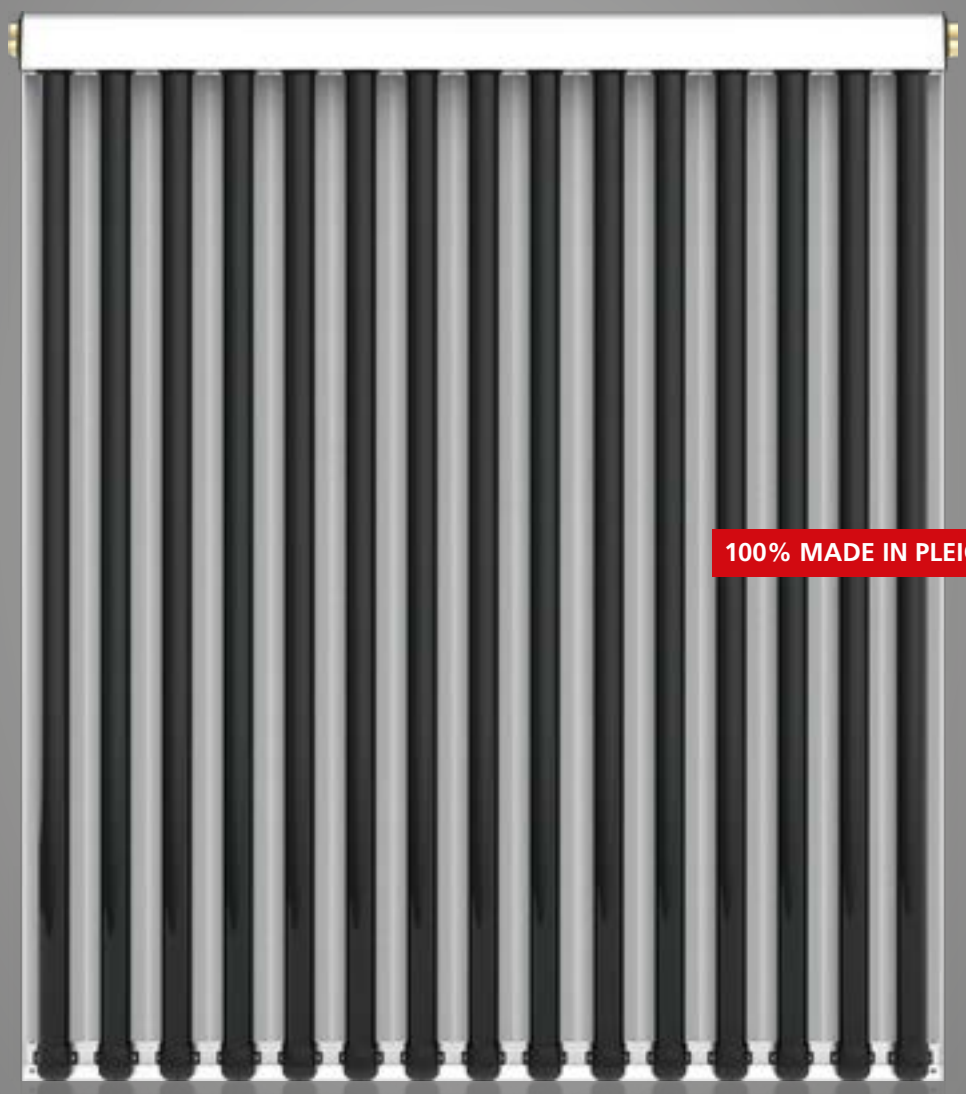

100% MADE IN PLEION

COLLECTOR WARRANTY 5+5 YEARS *EXTENDABLE

PIPE WARRANTY 10 YEARS ANTI-HAIL

X-RAY 15R

VACUUM SOLAR COLLECTORS

VERY HIGH PERFORMANCE
621 kWh/m² year
Wurzburg 50°

MODERN DESIGN AND ABSOLUTELY EASY INSTALLATION

Assembly time reduced to the minimum.

CPC TECHNOLOGY

TUBES	15
Base [mm]	1656
Height (tubes direction) [mm]	1921
Thickness [mm]	114
Gross surface area [m²]	3,18
Aperture area [m²]	2,87
Absorber surface 360°	3,85
Fluid content	2,68

X-RAY 15R - PERFOMA

PARALLEL CONNECTIONS
UP TO 15% GREATER ENERGY OUTPUT

TOP PERFORMANCES IN WINTER TIME
Perfectly functioning even when the temperature drops drastically

3RD INTEGRATED PIPE
INTEGRATED PLUMBING CONNECTIONS:
THE TUBE VANISHES, AND PROGRESS TAKES OVER.

No tubes are displayed on the roof: an integrated return line is installed in the collector-header.

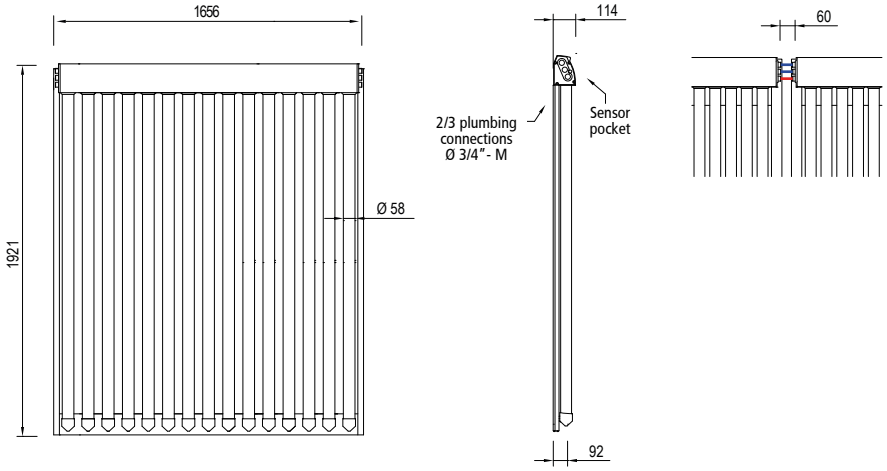

Code	Beschreibung	Pries
1010101531	X-RAY 15R VACUUM SOLAR COLLECTOR - BASIC	-
1010101532	X-RAY 15R VACUUM SOLAR COLLECTOR - PERFORMA	-

APPLICATIONS

USES

SOLAR KEYMARK Fraunhofer FLAT ROOF 45° SLOPING ROOF

X-RAY 15R

TECHNICAL SPECIFICATIONS

TECHNICAL SPECIFICATIONS		
Vacuum tubes	N°	15
Maximum number of collectors in battery	N°	6
Anchorage devices	N°	4 o 6
Dimensions of anchorage devices	Ø inch	3/4 " M
Open surface	m²	2,87
Absorption surface	m²	3,85
Gross surface	m²	3,18
Dimensions (LxHxD)	mm	1656 x 1921 x 114
Thickness of tested insulation, curved insulation in aluminised fibre glass.	mm	30
Diameter-length of vacuum tubes	mm	58/47 - 1800
Recommended inclination	°	15 - 75
Weight	kg	58,2
Content of heat-transfer fluid	litri	2,68
PERFORMANCES		
η_0 Optical yield (ref. light absorption surface)	%	61,5
k1 transmission coefficient (ref. light absorption surface)	W/m²K	0,850
k2 transmission coefficient (ref. light absorption surface)	W/m²K²	0,009
Nominal power	W	1955
Factor of angle correction incidence	K50°	1,05
Thermal capacity (ref. light absorption surface)	kJ/m²K	34
Energy produced annually EN 12975 – Wurzburg – Temperature 50°C	kWh	1974
EN 12975-2 test Report	-	RP.2018.COL.202b.1
DIN CERTCO registration number	-	16083 Rev.0 KIWA
Recommended capacity per collector	l/h	2,25
Stagnation temperature	°C	176
Maximum pressure	bar	10

POWER CURVES of X-RAY 15R collector according to change in irradiation 400-700-1000 W/m² and temperature difference.

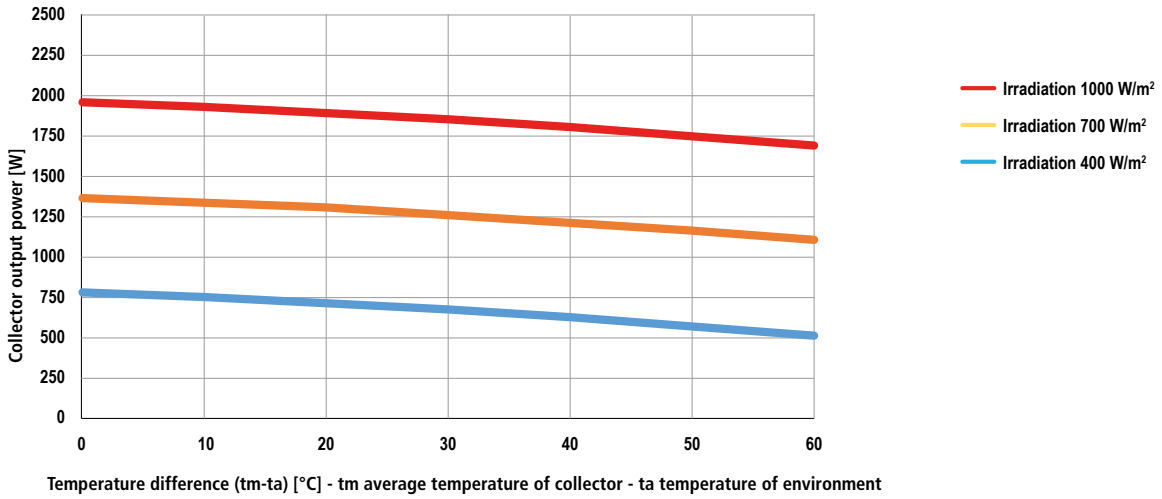

POWER P[W]			
tm-ta [°C]	I=400 [W/m²]	I=700 [W/m²]	I=1000 [W/m²]
0	782	1369	1956
10	752	1339	1926
20	717	1303	1890
30	675	1262	1849
40	628	1215	1802
50	576	1162	1749
60	517	1104	1690

PERFORMANCE CURVES of X-RAY 15R collector according to change in irradiation 400-700-1000 W/m² and temperature difference.

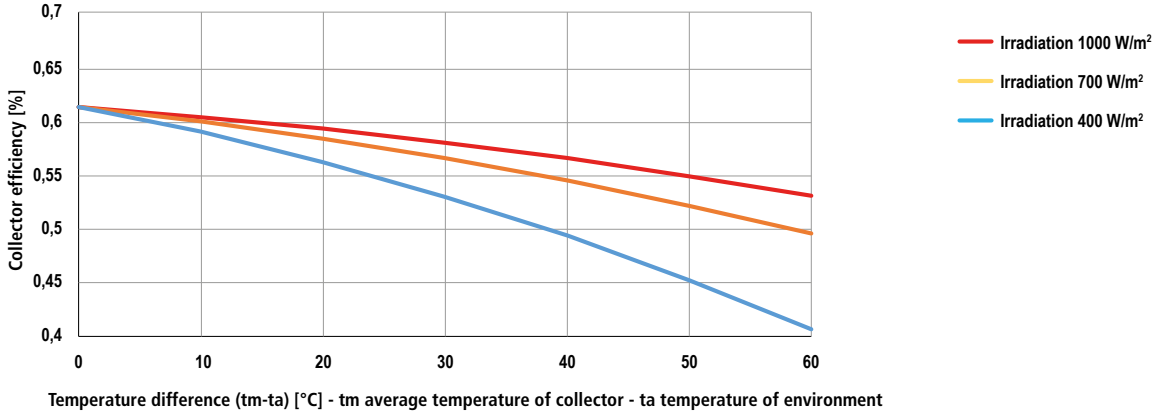

PRESSURE DROP of X-RAY 15R according to change in irradiation 400-700-1000 W/m² and temperature difference.

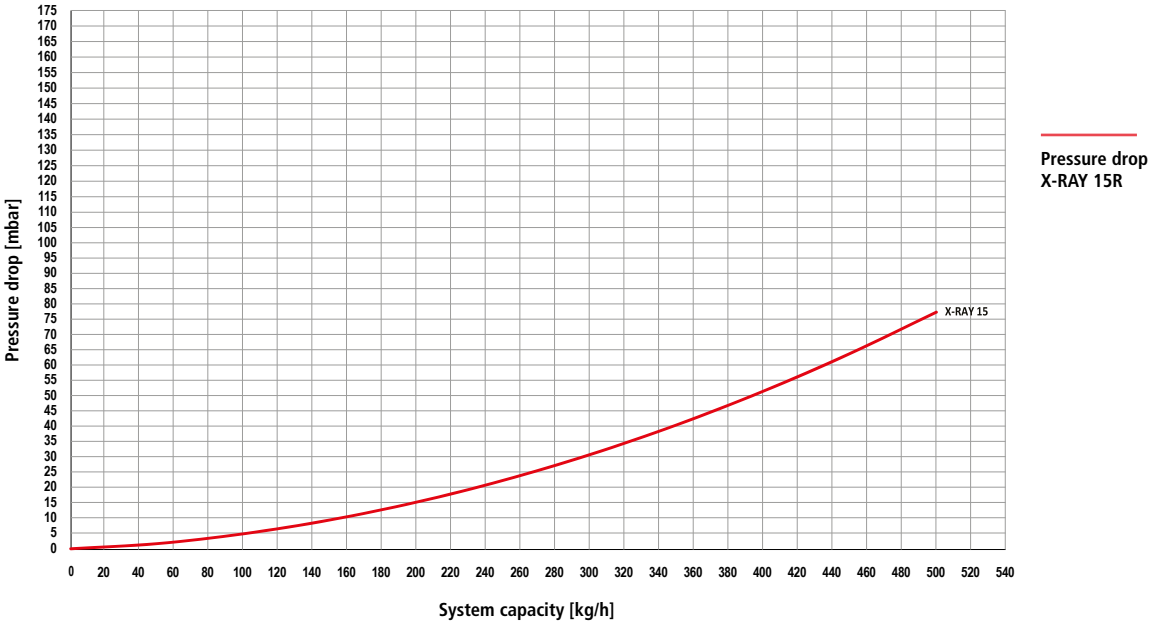

DIMENSIONING

DISTANCE [L]

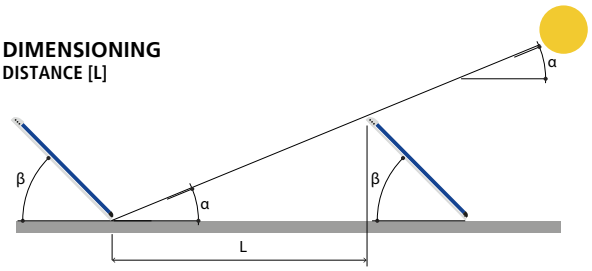

Inclination of solar rays α[°]	Inclination of solar collector β [°]		
	35°	45°	50°
15	4,1	5,1	5,5
25	2,3	2,8	3
35	1,5	2	2,2

PIPE DIMENSIONING FOR CONNECTING COLLECTORS TO THE BOILER

Number of collectors	Recommended capacity [l/h]	Pipes Cu Øe/Øi [mm]
1	135	18/16
2	270	18/16
3	405	22/20
4	540	22/20
5	675	28/25
6	810	28/25

DIMENSIONS AND MAX AREA REQUIRED*

Number of collectors	Width on sloping roof [mm]
1	1656
2	3375
3	5090
4	6805
5	8520
6	10240

* the values refer to the Pleion fixing brackets