Operating manual

Comfortable
heating. With wood!

HDG F20/25/30

HDG F40/50

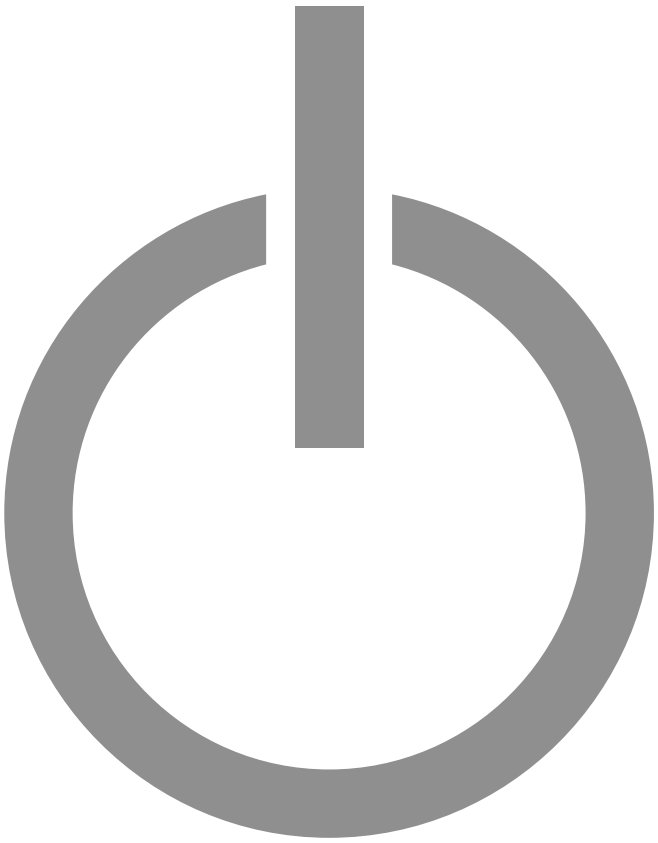

hdg-bavaria.com

Content

1 Notes on this manual

1.1 Introduction

SAFE AND SIMPLE OPERATION

This Operating manual contains important instructions on the boiler

- HDG F20/25/30
- HDG F40/50

and how to operate it properly and safely. Following these instructions helps to avoid dangers, prevent repair costs and downtimes, maintain reliability and extend the life expectancy of the heating system.

READING THE OPERATING MANUAL

This Operating manual must be read and observed by everyone who operates or works on the HDG F20-50.

TECHNICAL CHANGES

We continuously develop and improve our boilers. The information in this edition was correct at the time of going to press.

We reserve the right to make changes which may then differ from the technical details and illustrations in this Operating manual.

COPYRIGHT

GUARANTEE

The terms and conditions of the guarantee of your boiler can be found in the enclosed information sheet.

SYMBOLS USED

In this Operating manual, the following designations and symbols are used for particularly important information:

1. Instructions to the operator
2. Work through the steps in the sequence specified.

✓ Result of the action described

✎ Cross reference for more explanation

- List
  - List

1.2 Glossary

Term	Explanation
Actuator	This is a component which carries out a certain function in the heating system, e.g. flue gas fan.
Central module	Pre-fabricated plug board for electrical components.
Display	Display on the control unit HDG controls.
Flue gas fan	Creates a vacuum inside the boiler and provides the boiler with air for combustion.
HDG controls	Boiler and heating system controller.
HDG F20-50	Boiler for burning untreated wood.
HDG F20-50 Hybrid	Boiler for burning untreated wood. The HDG F Hybrid is also intended for combined used with a HDG K Hybrid pellt unit
Lambda sensor	This is an electrical component which monitors residual oxygen levels in the flue gas.
Safety temperature limiter	An automatic device that interrupts and locks the supply of energy and combustion air when the maximum permissible boiler temperature is reached. The energy supply or combustion air supply can only be re-enabled after the boiler temperature has fallen below a preset limit and has been reset by hand or by means of a tool.
Sensor	Monitors certain parameters (e.g. temperature) and forwards them to the control system for analysis.
Thermal safety device	Safety device that allows cold water to flow through the safety heat exchanger if the boiler becomes too hot.

Table 1/1 - Glossary

2 Safety notes

2.1 Intended use

Basic system design principles

Basic principles

The heating system was built using state-of-the-art technology and conforms to recognised safety regulations. Nevertheless, there is still a risk of injury or death to users or bystanders, and of adverse effects upon the heating system or upon other material goods. **Have your specialist heating company provide you with detailed instructions on the operation of the heating system**.

Using the heating system

Only use the heating system when it is in perfect condition. Use it properly, as intended, be aware of safety and hazards, and observe the Operating manual. Have any faults which could impair safety fixed immediately.

This device can be used by children over 8 years old and people with reduced physical, sensory or mental capabilities or a lack of experience and knowledge, provided they are supervised or have been instructed on the safe use of the device and understand the resulting risks. Children may not play with the device. Cleaning and user maintenance must not be carried out by children without supervision.

Basic principles for the content of the operating manual

Scope

The content of this operating manual is intended exclusively for the planning, installation and operation of the HDG F20-50 boiler. The further implementation of applicable standards and guidelines, for example regarding installation of the heating system (pipework, etc.), is not part of this operating manual. HDG Bavaria does not assume any liability for this.

Proper and improper operation

Purpose of the heating system

The HDG F20-50 boiler is designed for the standard operation of burning untreated wood, for example in the form of split logs and pressed wood briquettes in hot-water heating systems.

Any other application is considered improper use. The manufacturer will accept no liability for any damage resulting from improper use. The operator bears sole responsibility in such cases.

Proper use includes adherence to the installation, operation and maintenance requirements specified by the manufacturer.

Modification of the specified operating values will affect the heating system's control programme and could lead to malfunctions. Only trained maintenance and operating personnel may undertake modifications to the operating values.

For more information on fuel, see chapter "3 Mode of operation", section "3.4 Fuel quality requirements".

2.2 Residual risks

Despite all precautions, the following residual risks remain:

Caution!

Hot surfaces

Contact with the hot surfaces of the boiler (e.g. inside doors, flue pipe, etc.) can result in burns. Even after the boiler is switched off, the surfaces only cool down slowly.

Wait until the boiler has cooled down before touching non-insulated components.

Danger!

Danger of asphyxiation due to carbon monoxide

If the boiler is in operation, carbon monoxide can be emitted through the open doors or lids.

Always keep the doors and lids closed. Only open them when the boiler has finished burning. Do not leave them open any longer than necessary and never leave them open unattended.

Warning!

Danger of fire

When the heating system is in operation, open doors and lids constitute a fire hazard. Furthermore, combustion residue (ash, charcoal etc.) can reignite after being removed from the boiler.

Always keep the doors and lids closed. Only open them when the boiler has finished burning. Do not leave them open any longer than necessary and never leave them open unattended. Put the annealed combustion residue in the ash pan of a non-flammable and closable container.

Danger!

Danger of explosion

A concentration of carbon monoxide that is too high can result in an explosion.

Observe the flue draught requirement of the chimney.

Caution!

Risk of injury from automatically driven components

Working on the flue gas fan can lead to hand injuries due to the moving parts.

When working on the flue gas fan, disconnect it from the mains.

Danger!

Electric shock

Working on live components (such as the plug board) can result in an electric shock.

Work on the live components may only be carried out by a qualified electrician. Make sure the system is disconnected from the mains and prevented from being switched on again.

Warning!

The boiler is under pressure.

2.3 Warnings and safety symbols used

The following warnings and safety symbols are used in this Operating manual:

Danger!

Dangerous electrical current or voltage

Work in areas marked with this symbol may only be performed by a qualified electrician.

Warning!

Hazardous area

Working in areas marked with this symbol can lead to serious injuries or to extensive material damage.

Caution!

Hot surfaces

Working in areas marked with this symbol can lead to burns.

Warning!

Danger of fire

Working in areas marked with this symbol can lead to a fire.

Danger!

Danger of asphyxiation due to lack of oxygen

When working in areas marked with this symbol, there is a danger of asphyxiation due to high concentrations of carbon monoxide.

Warning!

Automatic start-up

Working in areas marked with this symbol can lead to injuries due to automatic start-up.

Danger!

Danger of explosion

A concentration of carbon monoxide that is too high can result in an explosion.

Caution!

Danger from suspended loads

Working in areas with this symbol may involve danger from falling objects.

Important!

Frost danger

Only install the heating system in a frost-proof room.

Instructions regarding disposal

Additional information for the operator

2.4 Duty of information

READING THE OPERATING MANUAL

Any person performing tasks on this system must read the Operating manual prior to beginning work, particularly the chapter "2 Safety notes".

This is especially important for persons who only occasionally work on the heating system, for example when cleaning or servicing it.

The Operating manual must always be kept readily accessible at the place where heating system is installed.

3 Mode of operation

3.1 Overview

FRONT VIEW HDG F20-50

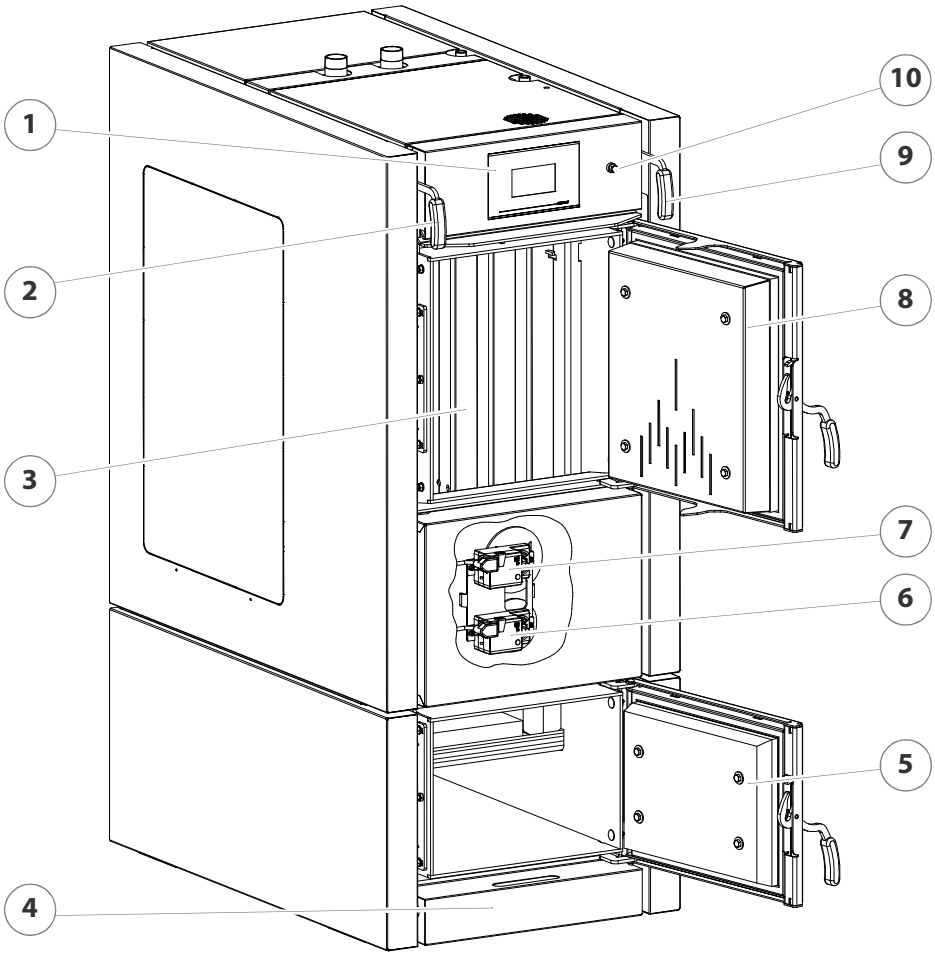

Figure 3/1 - Front view HDG F20-50

1 Control unitHDG Control Touch
2 Flue gas flap actuating handle
3 Fuel chamber
4 Ash pan
5 Combustion chamber door
6 Actuator secondary air
7 Actuator primary air
8 Fuel chamber door
9 Cleaning system actuating handle
10 Overheat cut-off device release button

Cross section of HDG F20-50

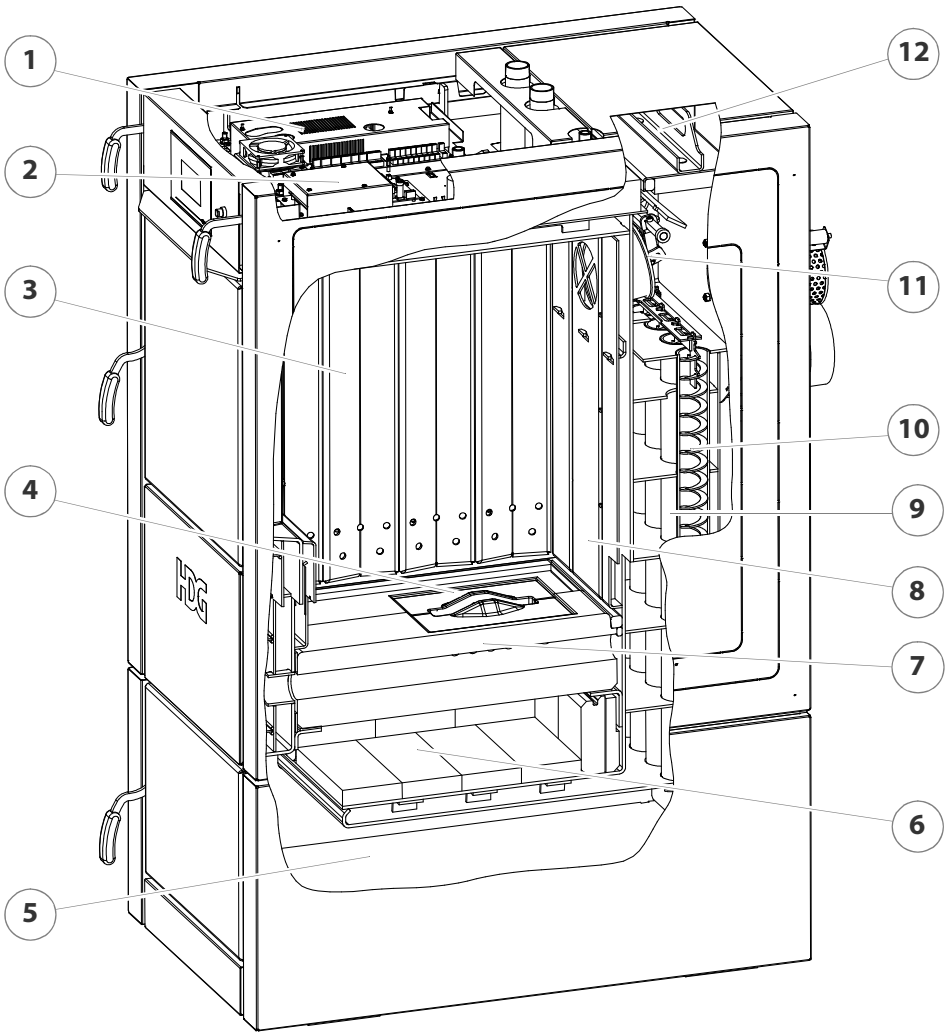

Figure 3/2 - Cross section of HDG F20-50

1 Central module
2 EM4 extension module (optional)
3 Side panels
4 Burner nozzle
5 Ash compartment
6 Combustion chamber
7 Nozzle brick
8 Back panels
9 Tubular heat exchanger
10 Cleaning turbulators
11 Flue gas flap
12 Cleaning shaft lid

Rear and side views HDG F20-50

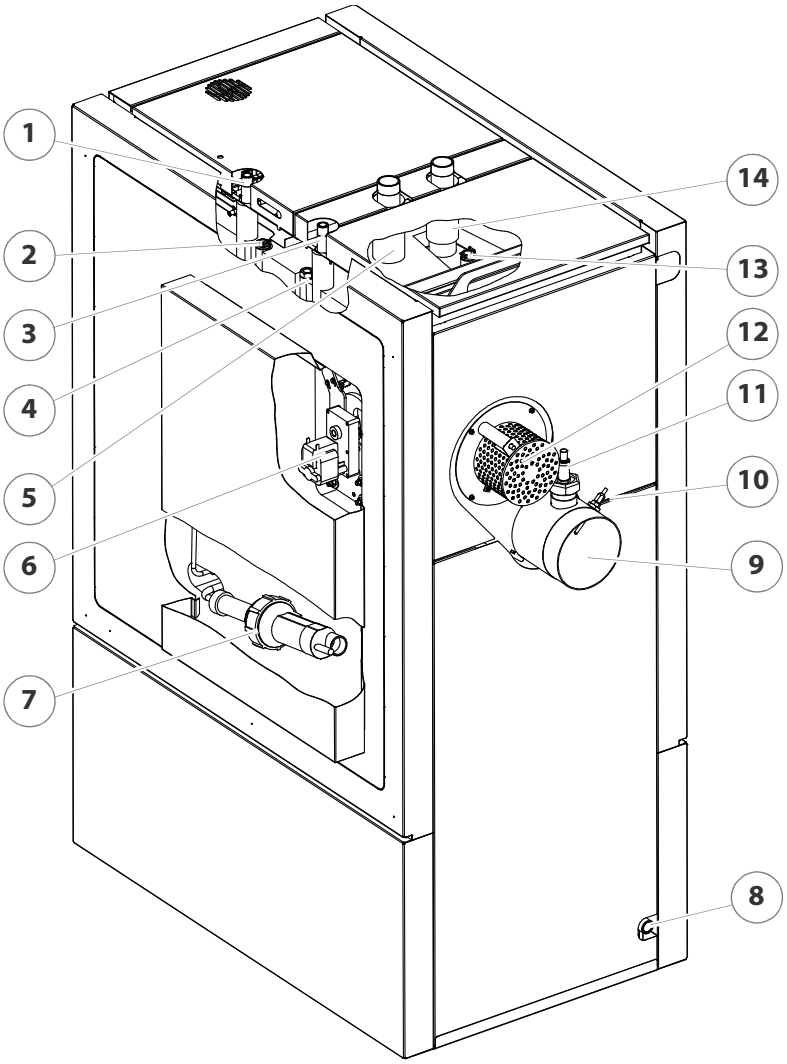

Figure 3/3 - Rear and side views HDG F20-50

1 Safety heat exchanger inlet (DN 15 male)
2 Immersion sleeve for boiler temperature and STL sensor
3 Safety heat exchanger outlet (DN 15 male)
4 Connection of immersion sleeve for thermal safety device (DN 15 IG)
5 Supply connection (DN 32 inside thread)
6 Cleaning motor (optional)
7 Ignition fan (optional)
8 Filling/draining connection (DN 15 IG)
9 Flue pipe connection 150 mm
10 Flue gas temperature sensor
11 Lambda sensor
12 Flue gas fan
13 Immersion sleeve for return temperature sensor
14 Return connection (DN 32 inside thread)

3.2 Functional description

Boiler HDG F20-50

General information

The HDG F20-50 is a special boiler for the firing of wood up to 50 cm in length. The HDG controls system regulates the combustion and output as well as the weather-compensated heating. The HDG F20-50 boiler and the HDG controls system are harmonised with one another and form a functional unit. This enables wood to be converted into heat energy in an environmentally sound and convenient manner.

Combustion process

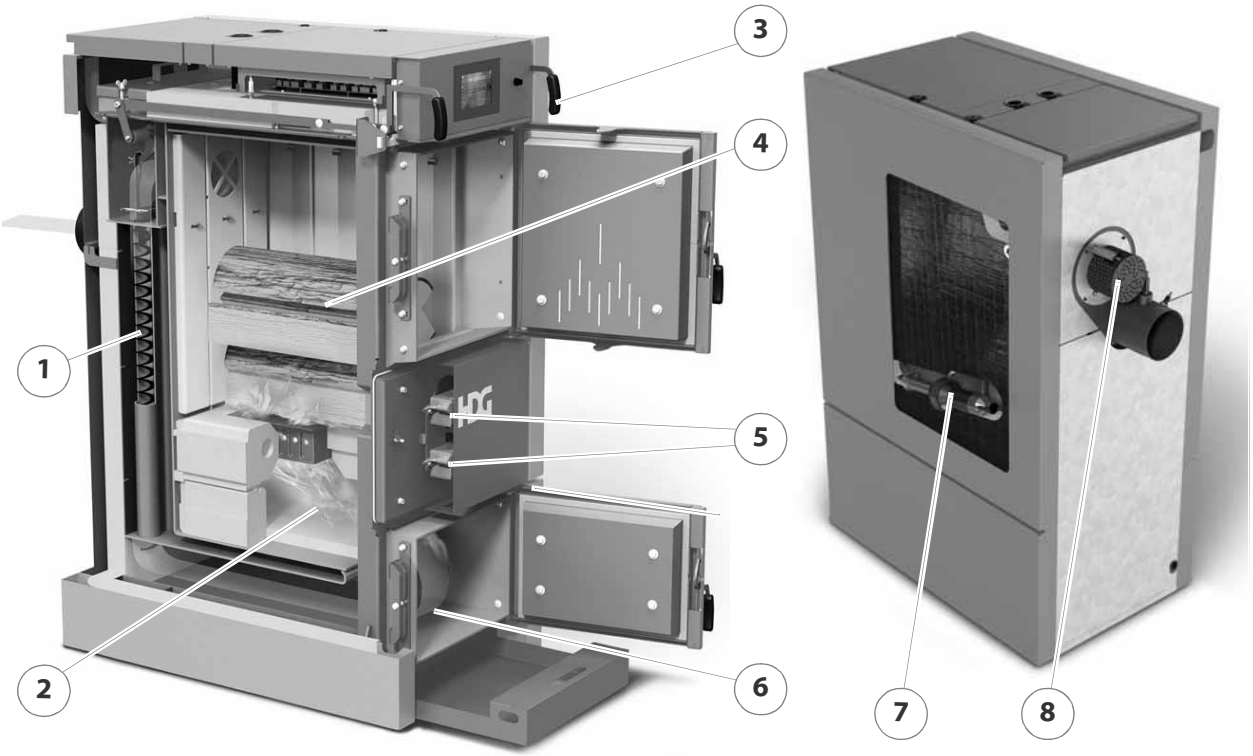

Figure 3/4 - Boiler HDG F20-50

Inside the HDG F20-50 boiler, fuel which has been manually placed in the fuel chamber (4) and ignited is degassed through the addition of primary air. It can also be ignited automatically using the ignition fan (7). The resulting wood gas is mixed with secondary air in the combustion chamber (2) where it is burnt off.

Ashes are collected in the large ash compartments (6) for combustion ash and fly ash.

The air necessary for combustion is supplied as required via the suction fan (8) and two actuators (5) with metering mechanisms.

The lambda sensor, the boiler temperature sensor and the flue gas temperature sensor are used to do the following:

- To continuously monitor the firing
- To adjust the boiler output

- To minimise emissions
- To optimise boiler efficiency

Cleaning system

When the actuating handle (3) of the cleaning system is pulled, the heat exchanger surfaces are cleaned by the turbulators (1) located inside. The turbulators can also be moved automatically using the drive motor.

Boiler and weather-compensated heating control HDG controls

Boiler control unit

The HDG controls boiler control unit is the electronic hub of the boiler. It consists of the ready-to-use control panel and control unit HDG Control Touch on the front of the boiler. Using the control unit, you can regulate the boiler and call up information on the current process.

Heating circuit control

The HDG controls controls the entire energy management of the heating system including the following, depending on the version:

- Accumulator management
- Weather-compensated heating circuits
- Domestic hot water heating
- External heat source
- Local heating transfer (mains pump)
- Solar system for hot water and support of the heating system

✎ For a description of the HDG controls boiler and weather-compensated heating control, refer to the “HDG controls” operating manual.

3.3 Technical data

HDG F20/25/30

Type of boiler	HDG F20	HDG F25	HDG F30
Performance data (measured according to DIN EN 303-5)			
Nominal thermal power	20 kW	25 kW	30 kW
Minimum thermal power	15 kW	15 kW	15 kW
Boiler efficiency at nominal thermal power	93.8 %	93.4 %	93.0 %
Electrical power consumption at nominal thermal power	78 W	82 W	85 W
Voltage / frequency	AC 1 x 230 V / 50 Hz		
Back-up fuse	10 A		
General boiler data			
Boiler class	5		
Maximum permissible operating pressure	3 bar		
Maximum supply temperature	95 °C*		
Minimum return temperature	60 °C		
Water capacity	125 l		
Fuel chamber capacity	155 l		
Weight	670 kg		
Layout data for flue calculation (DIN EN 13384-1)			
Flue gas temperature (Tw) at Nominal thermal power / lowest thermal power	120 °C / 120 °C	130 °C / 120 °C	140 °C / 120 °C
Flue gas mass flow at Nominal thermal power / lowest thermal power	0.013 /0.010 kg/s	0.013 / 0.010 kg/s	0.013 / 0.010 kg/s
CO_2content at Nominal thermal power / lowest thermal power	14.2 % / 13.3 %	14.2 % / 13.3 %	14.2 % / 13.3 %
Required flue draught (Pw)	10 Pa	10 Pa	10 Pa
Diameter of flue pipe connection	150 mm		
Height to centre of flue gas connecting pipe	1040 mm		
Water-side connections			
Supply and return connections (bushing)	DN 32, inside thread		
Safety heat exchanger connections (bushing)	DN 15, outside thread		
Connection for filling/draining (bushing)	DN 15, inside thread		
Recommended pipe dimensions (minimum)	DN 32		
Water-side resistance at nominal thermal power 10 K / 20 K	1600 Pa / 400 Pa	2000 Pa / 500 Pa	2400 Pa / 600 Pa

Table 3/1 - HDG F20/25/30 technical data

Type of boiler	HDG F20	HDG F25	HDG F30
Other information			
Combustion duration per filling in terms of fuel recommendation, approx.	Beech: up to 7 h Spruce: up to 6 h	Beech: up to 6 h Spruce: up to 5 h	Beech: up to 5 h Spruce: up to 4 h
Sound pressure level	< 70 dB(A)		
Min. Air inlet cross section	150 cm^2		

Table 3/1 - HDG F20/25/30 technical data

*Maximum operating temperatures of up to 110 °C can also briefly occur.

HDG F40/50

Type of boiler	HDG F40	HDG F50
Performance data (measured according to DIN EN 303-5)		
Nominal thermal power	40 kW	50 kW
Minimum thermal power	25 kW	25 kW
Boiler efficiency at nominal thermal power	93.7 %	94.3 %
Electrical power consumption at nominal thermal power	74 W	63 W
Voltage / frequency	AC 1 x 230 V / 50 Hz	
Back-up fuse	10 A	
General boiler data		
Boiler class	5	
Maximum permissible operating pressure	3 bar	
Maximum supply temperature	95 °C*	
Minimum return temperature	60 °C	
Water capacity	180 l	
Fuel chamber capacity	205 l	
Weight	830 kg	
Layout data for flue calculation (DIN EN 13384-1)		
Flue gas temperature (Tw) at Nominal thermal power / lowest thermal power	130 °C / 120 °C	140 °C / 120 °C
Flue gas mass flow at Nominal thermal power / lowest thermal power	0.022 kg/s / 0.014 kg/s	0.031 kg/s / 0.014 kg/s
CO_2content at Nominal thermal power / lowest thermal power	14.4 % / 14.5 %	14.6 % / 14.5 %
Required flue draught (Pw)	10 Pa	10 Pa
Diameter of flue pipe connection	150 mm	
Height to centre of flue gas connecting pipe	1070 mm	
Water-side connections		
Supply and return connections (bushing)	DN 32, inside thread	
Safety heat exchanger connections (bushing)	DN 15, outside thread	

Table 3/2 - HDG F40/50 technical data

Type of boiler	HDG F40	HDG F50
Connection for filling/draining (bushing)	DN 15, inside thread	
Recommended pipe dimensions (minimum)	DN 32	
Water-side resistance at nominal thermal power 10 K / 20 K	1500 Pa / 300 Pa	1700 Pa / 400 Pa
Other information		
Combustion duration per filling in terms of fuel recommendation, approx.	Beech: up to 6 h Spruce: up to 5 h	Beech: up to 5 h Spruce: up to 4 h
Sound pressure level	< 70 dB(A)	
Min. Air inlet cross section	150 cm^2	

Table 3/2 - HDG F40/50 technical data

*Maximum operating temperatures of up to 110 °C can also briefly occur.

3.4 Fuel quality requirements

The HDG F20-50 boiler is designed for the standard use of burning untreated wood in the form of logs or pressed wood briquettes.

With regard to the quality standards for solid fuel the DIN EN ISO 17225 “Biogenic solid fuel - fuel specifications and classes - classification of wood chips” applies.

- Part 5 “Classification of log wood”
- Part 3 “Classification of wood briquettes”

In accordance with this standard, the properties of fuels that can be used with the HDG F20-50 are specified below in more detail.

Log wood

Essential criteria are the length, diameter and water content of the fuel.

Length and diameter

For the log wood boiler HDG F20-50, firewood with a length of up to 50 cm (L50) can be used. The maximum diameter of the firewood is specified as D15 (diameter of maximum 15 cm).

The firewood must be split at least once so as to provide an optimal surface for gasifying the wood. The major proportion of the firewood should measure between 8 and 12 cm in diameter.

Water content

When selecting fuel, note that the calorific value of the wood is primarily dependent on the water content. The more water contained in the wood, the smaller the calorific value, since the water vaporises in the course of the burning process and thereby consumes heat. This leads to a decreased efficiency and thus to higher fuel consumption. A higher water content in the fuel also results in a steadily decreasing output of the (central-heating) boiler,

greater amounts of ash and smoke, as well as making it increasingly unfit for storage. In addition, this can lead to extensive tarring of the boiler, the flue pipe and chimney, and cause a chimney fire.

Logs should therefore be split before they are cured. This is done in order to achieve a water content which makes them suitable for burning within a reasonable amount of time (approx. two years).

The maximum permissible water content of log wood for the HDG F20-50 is 20% (M20).

For technical considerations, a representative calorific value is selected depending on water content. For burning that is both economical and low on emissions, the calorific value should not be less than 4 kWh/kg.

Water content	Moisture	Calorific value	Relative wood consumption
10.0 %	11.1 %	4.6 kWh/kg	87 %
20.0 %	25.0 %	4.0 kWh/kg	100 %
26.0 %	35.0 %	3.7 kWh/kg	110 %
30.0 %	42.9 %	3.4 kWh/kg	120 %

Table 3/3 - Calorific value depending on water content

Pressed wood briquettes

Pressed wood briquettes are pressed shavings, with or without various forms of additives, with a diameter of more than 25 mm.

Essential criteria for the definition of the property classes are the length and diameter, moisture content and ash content of the fuel.

Length and diameter

- D100/L500

The diameter of the briquettes must not exceed 100 mm and the length must not exceed 500 mm.

Water content

The water content must not exceed a maximum of 12 % (M12) for property class A1 and a maximum of 15 % (M15) for property class A2 and B.

Ash content

The ideal ash content is a maximum of 1.0% by weight (A1.0) which complies with property class A1. When using pressed wood briquettes with a higher ash content (A2 and B) , secondary measures (filter technology) may be necessary for complying with the dust emission values according to the 1st Federal Emission Control Ordinance (2nd stage).

Recommended fuel

It is important that fuel is used according to HGD fuel specifications in order to guarantee compliance with emission limit values according to the 1st Federal Emission Control Ordinance (1st and

2nd stage). In particular, all fuel requirements concerning size, water content and ash content must be met. Without the use of secondary measures (filter technology), only fuels of property class A1 are suitable for this in each case.

Pay particular attention to the fuel quality, both when ordering and at delivery.

Important!

If there is a significant change of fuel, the system must be reset accordingly and checked for emissions by authorised specialists.

HDG recommends log wood with a length of L50 (50 cm), a maximum diameter of D15 (max. 15 cm) and a water content of M20 (20%). For kindling, we recommend log wood with a diameter of D5 (2–5 cm).

Permitted fuel in accordance with 1st Federal Emission Control Ordinance (Germany)

Additional quality requirements apply in Germany independently of the fuel specification in accordance with DIN EN ISO 17225. In accordance with section 3 (1) of German law (1. BimSchV), the fuel classes 4, 5, 6, and 7 may be used in the HDG F20-50 heating system.

4 Planning and installation

4.1 Dimensions

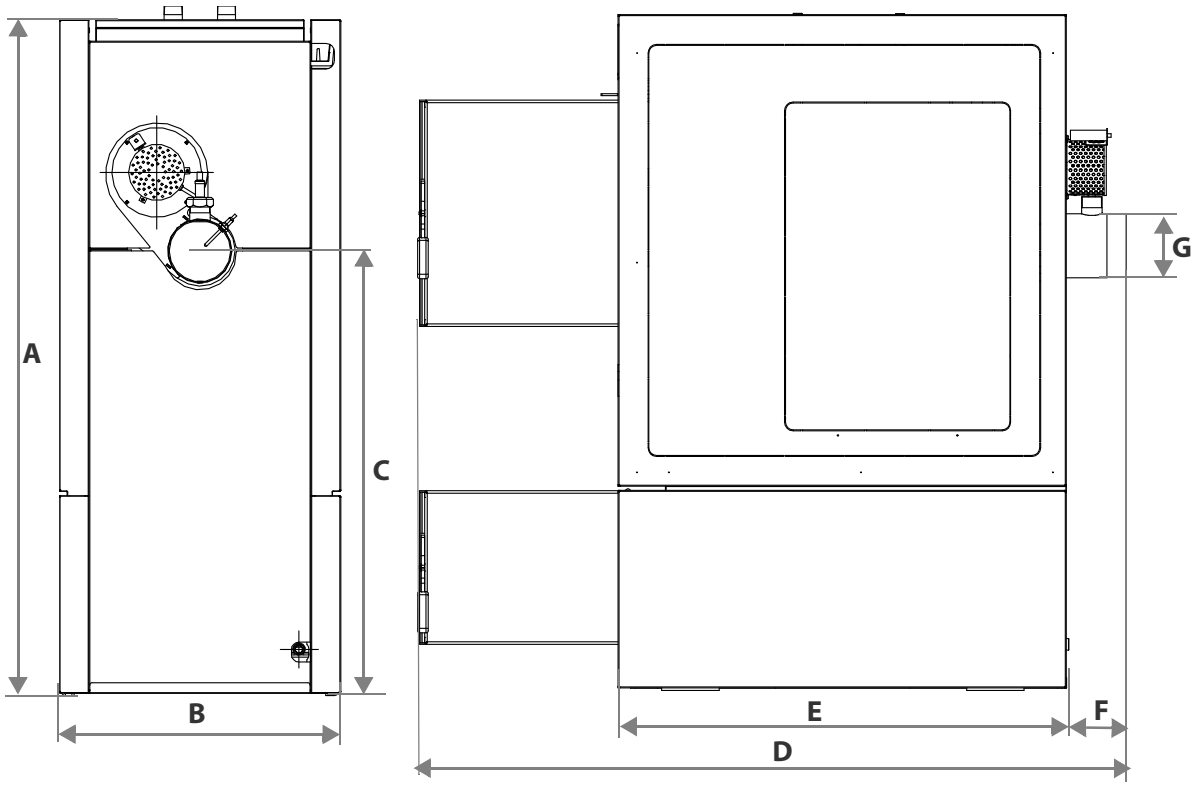

Figure 4/1 - Dimensions

		HDG F20/25/30	HDG F40/50
A	Boiler height	1590 mm	1650 mm
B	Width of boiler	660 mm	760 mm
C	Height to centre of flue gas connecting pipe	1040 mm	1070 mm
D	Total length with opened fuel chamber door	1660 mm	1760 mm
E	Boiler length	1050 mm	1100 mm
F	Overhang of flue pipe connection	140 mm	140 mm
G	Diameter of flue pipe connection	150 mm	150 mm
	Fill opening dimension	470 x 420 mm	520 x 540 mm

Table 4/1 - Dimensions

4.2 Structural requirements

Boiler installation site

Applicable regulations

Local building regulations always apply. In Germany, individual state regulations on boilers and furnaces also apply.

Building regulations may differ from country to country and state to state.

For this reason, consult a qualified specialist for the planning and installation of your boiler room.

Make sure there is an adequate supply of fresh air to the furnace room so that there is enough air available for the combustion process in all of the installed boilers, and to protect the operator from the hazards of insufficient oxygen.

Installation

A base is not necessary for installation of the boiler. Ensure alignment on a horizontal plane.

Observe the fire safety regulations.

To ensure unhindered operation and maintenance of the heating system, it is imperative that the heating system is installed in accordance with the specifications of HDG Bavaria GmbH and that the minimum spacing requirements are observed.

Also note that the thresholds in DIN 4109 “Soundproofing in building construction” may not be exceeded.

More detailed information can be found in the relevant local and national regulations.

Also observe the accident prevention regulations of the official safety organisations.

We recommend that objects which are not needed for the operation or maintenance of the heating system are not stored in the furnace room.

Required room sizes and minimum clearances

Important!

When installing the pipes for the heating system, observe the dimensions of the boiler and ensure the minimum clearances.

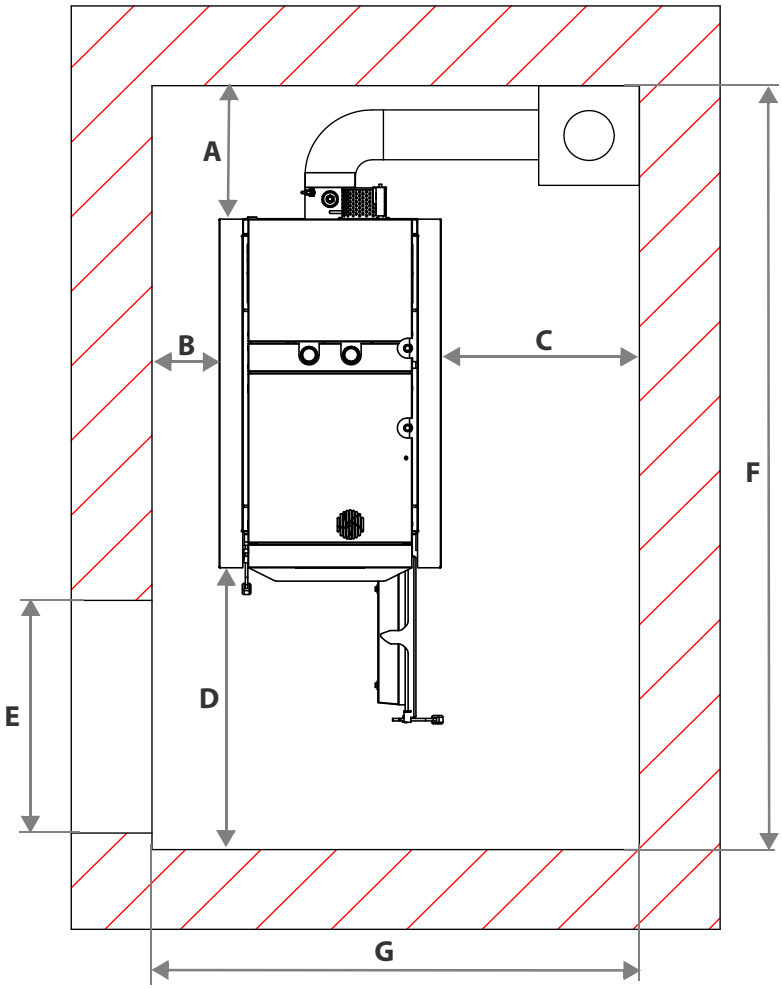

Figure 4/2 - Required room sizes and minimum clearances

	HDG F20/25/30	HDG F40/50
A	at least 300 mm	at least 300 mm
B	at least 100 (or 600) mm	at least 100 (or 600) mm
C	at least 600 (or 100*) mm	at least 600 (or 100*) mm
D	800 mm	800 mm
E	660 mm	760 mm
F	at least 2200 mm	at least 2300 mm
G	at least 1400 mm	at least 1500 mm
Minimum ceiling height	1900 mm	2000 mm
Recommended room height	2300 mm	2300 mm
min. installation dimensions (without cladding and attachments)	1025 x 650 x 1585 mm	1075 x 750 x 1645 mm

Table 4/2 - Room sizes and minimum clearances

*does not apply in connection with HDG automatic ignition system / automatic cleaning system

4.3 Connections

Chimney

According to EN 303-5, the entire flue system must be installed in such a way that contamination, condensation and insufficient flue draught are avoided. Here note that, in the accessible operational area of the boiler, flue gas temperatures of less than 160 K above room temperature may arise.

✎ The required flue gas values are listed in chapter “3 Mode of operation”, section “3.3 Technical data”.

The benefits of the HDG F20-50 can only be enjoyed if all of the prerequisites for good combustion are ensured. The heating system and chimney form a single functional unit and must be adapted to one another in order to guarantee fault-free and economical operation.

Since the flue gas temperature may lie below 100°C when the system is under partial load, a chimney/flue is required which meets the requirements of DIN EN 13384-1: 2003-03 “Thermal and fluid dynamic calculation methods”. If it does not meet this standard, contact your specialist heating company or chimney technician.

When planning the flue system, a flue calculation based on DIN EN 13384-1 must be performed by authorised specialists.

Another essential criterion is meeting the flue draught requirement. This depends on three major factors.

Chimney characteristics

The requirements for minimising the draught loss in the chimney are:

- Good thermal insulation to avoid the flue gases cooling down too quickly.
- Smooth interior surface to reduce the flow resistance.
- A tight seal of the chimney to avoid outside air leaking in. Air penetrating from the outside speeds up the cooling of the flue gases.

These requirements correspond to chimneys of the type conforming to DIN EN 13384-1: 2003-03 “Thermal and fluid dynamic calculation methods”.

Free-standing chimneys require particularly good insulation.

Chimney dimensions

The system may only be connected to a chimney which has been dimensioned in accordance with DIN EN 13384-1, taking into account the fuel planned and the expected load, and which meets local building regulations for the installation site.

A chimney can only be designed with full knowledge of the on-site conditions. This includes taking into account the following factors:

- Building location
  - Surrounding hills/slopes
  - Wind direction

- Location of the chimney in the roof
  - The opening of the chimney must be at least 0.5m above the highest edge of roofs with a slope of more than 20° or at least 1.0 m higher than roof surfaces which slope at 20° or less.
- The effective height of a chimney is measured from the flue entrance into it to the end of the chimney.

Connecting the boiler to the chimney

The firing system must be connected with a connecting piece which is as short as possible, at an angle which is less than 30 - 45° to the chimney. You should aim for a connecting piece with a maximum length of 1 m using just one fitting.

Every additional fitting results in a greater pressure loss in the exhaust path and should thus be avoided. The same is true for overly long connecting pieces. If, for constructional reasons, these must be longer than 1 m, they should be adequately insulated (at least 5 cm of mineral wool or equivalent material) and, if possible, fitted with an upward inclination.

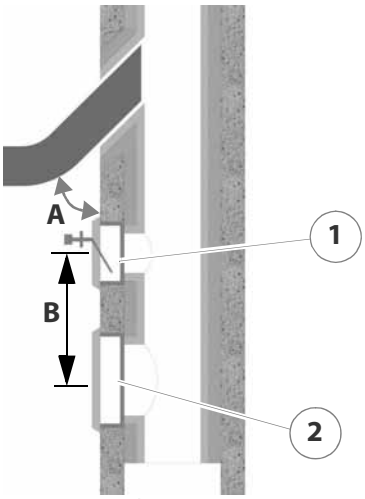

1 Auxiliary air unit

2 Cleaning door

A) Chimney approx. 30° - 45°

B) Clearance at least 50 cm

Figure 4/3 - Chimney connection

The following should also be considered:

- The connecting piece may not protrude into the chimney.
- If the system flue gas pipe has a larger diameter than the chimney, the connecting piece must reduce its diameter to that of the connection. In this case, the connecting piece should taper as gently as possible.
- Use bends rather than elbows; the radius of the elbow may not be less than the diameter of the pipe.
- The chimney should be vertical and straight, if possible without deformations (take particular care in older buildings).
- All of the cleaning doors and measurement hatches on the chimney must have tight seals.
- To reduce the entry of additional cold air, only attach one heat generator per chimney.
- To prevent dust from escaping, the flue pipe must be sealed with heat-resistant silicone.

Electrical system

The instructions in 2006/95/EC (low voltage directive) must be followed for the electrical connections to the system. The electrical connection must be made on a separate isolating unit.

✎ The required connection values are described in chapter “3 Mode of operation”, section “3.3 Technical data”.

Water

Important!

The heating system must be filled with water in accordance with VDI guideline 2035, “Avoiding damage in hot water heating systems”.

Antifreeze agents may only be used after prior consultation with HDG.

Using an accumulator

When calculating the thermal requirements of buildings, e.g. according to DIN EN 12831 “Method for calculating the normal heating load”, the lowest outside temperature of the relevant climate zone (e.g. -15 °C) is used. These conditions only apply a few days per year, thus, the thermal performance of the heating system is greater than required on most days when heating is needed.

As the boiler for this system is rated for a nominal load, the use of an accumulator is required.

The size of the accumulator must be adapted to the boiler type, the type of wood and the building's heating requirements. In terms of 1. BImSchV, the minimum capacity of the accumulator is 12 litres per litre of fuel chamber capacity; however, the required 55 litres per kW of nominal thermal power must be maintained.

For the HDG F20/25/30 boiler, the minimum accumulator volume is 2000 litres and for the HDG F40/50 it is 3000 litres.

Important!

Please also observe DIN EN 303-5 as well as the individual comfort requirements of the customer for the capacity of the accumulator.

Safety devices

Safety devices (e.g. boiler safety module, insufficient water cutout, etc.) must be installed in accordance with DIN EN 12828: 2003 “Design of water-based heating systems in buildings”.

Return temperature control

Operating temperatures which are too low significantly shorten the service life of the boiler. Water vapour contained in the flue gas could be released in the form of condensation if the temperature drops below the dew point (approx. 50 - 55 °C), especially in the area

around the water-cooled heat-exchanger surfaces. This condensation, in combination with combustion residue, can lead to corrosion.

For these reasons, a return temperature control must be installed for the HDG F20-50 heating system. The return temperature control causes the water from the boiler return flow to be mixed with the water from the boiler supply flow until the minimum return temperature has been reached.

✎ The minimum return temperature is listed in chapter “3 Mode of operation”, section “3.3 Technical data”.

The control of the return temperature is handled by the HDG controls control unit.

The return temperature control consists of a 3-way mixing valve with a 230 V servo drive (running time 120-240 s) and a circulation pump from energy efficiency class A. For the HDG F20-50, we recommend

- Wilo 30/1-7.5, 3-way mixing valve DN 32 (or equivalent).

The pipe dimensions must be adapted to meet the requirements at the site. Take the water-side connections of the boiler for the supply and return into account.

✎ See chapter “3 Mode of operation”, section “3.3 Technical data”.

The return temperature control may not be further than 5 metres from the boiler.

The hydraulic system must be installed in accordance with specific technical principles of heating engineering. Take into account the stop cocks required for maintenance work and repairs.

The return temperature control is not designed for the use of a gravity brake and this should therefore not be installed.

The return temperature control must be installed according to the specifications of HDG Bavaria.

4.4 Hydraulic connection

The hydraulic connection depends on the schematic diagram selected in the respective HDG controls system.

✎ See the supplied schematic diagram and electrical circuit diagram.

4.5 Scope of delivery

The boiler is delivered on a pallet. Included in the scope of delivery:

- Boiler HDG F20-50
- Cladding
- Cleaning tools
- Control unit HDG Control Touch
- Accessories
- Operating documentation

Important!

Upon delivery, small parts are located in the fuel chamber of the HDG F20-50 boiler.

4.6 Installing the heating system

Requirements

The heating system is installed by specialists from HDG Bavaria GmbH or an authorised HDG partner and a qualified electrician.

Danger!

Risk of material damage and injury due to incorrect installation

Installing the system requires comprehensive specialist knowledge. If installed by untrained persons, the heating system can be damaged and persons may be injured due to secondary damage.

Only allow authorised specialists to perform the installation.

Danger!

Dangerous electrical current or voltage

Switch off the mains supply to the heating system during the installation.

Installing the boiler

Caution!

Beware of suspended loads.

The boiler weighs over 650 kg. If the boiler is dropped during transport, persons can be seriously injured and the boiler can be damaged.

Make sure that you use appropriate lifting gear when placing the boiler.

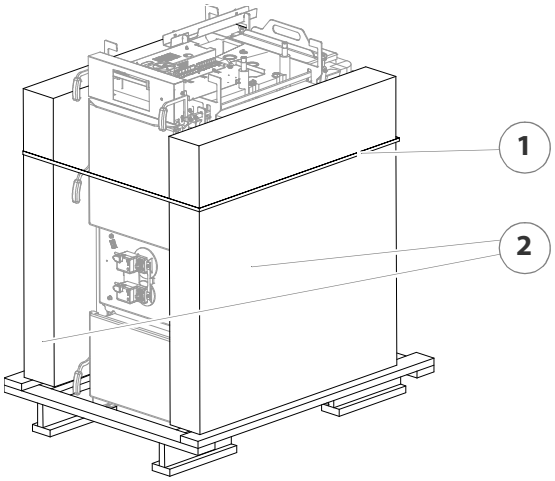

Figure 4/4 - Removing the cladding packages

1. Remove the packaging from the boiler.

The boiler packaging can be taken to the local recycling company.

2. Loosen the fastening strap (1) and lift the two side cladding packages (2) away.

Transporting with a pallet truck

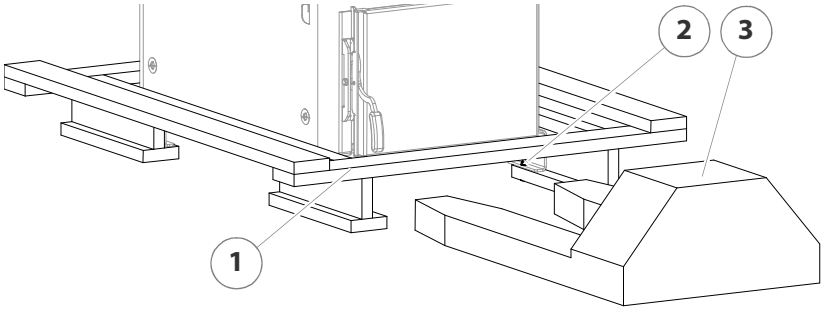

Figure 4/5 - Removing the pallet

3. Release the four M8 hexagon nuts (SW13) (2) under the boiler.
4. Remove the cross member from the pallet (1), from either the front or rear of the boiler.
5. Slide the pallet truck (3) under the boiler.
6. Lift the boiler with a lifting truck (3).

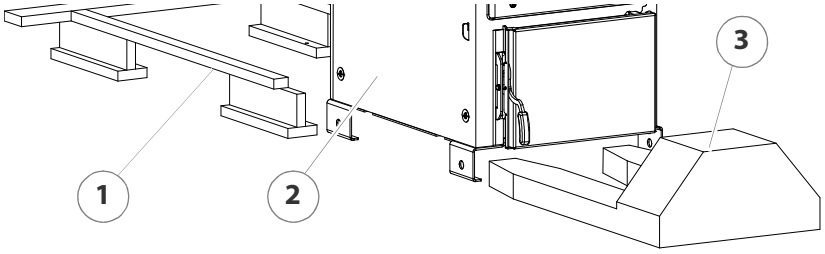

Figure 4/6 - Transporting with a pallet truck

7. Pull the pallet (1) out from under the boiler (2).
8. Transport the boiler (2) to the desired installation site.
9. Set down the boiler (2) at the planned location while observing the minimum clearances.

✎ See section “4.2 Structural requirements”, under “Required room sizes and minimum clearances”.

10. Remove the lifting truck (3).
11. Align the boiler with plastic plates or flat steel strips (not included in the scope of delivery) so that it is horizontal.

✓ The HDG F20-50 boiler has been placed in position.

Transport with a crane

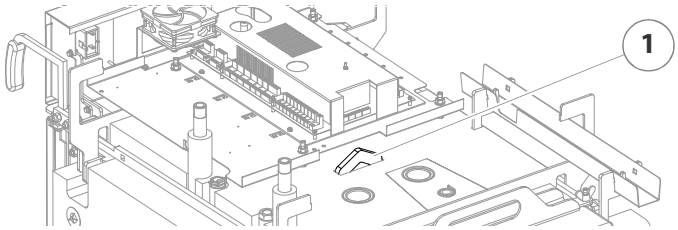

Figure 4/7 - Crane eyelet

Warning!

Damage caused by improper assembly

The crane eyelet is located very close to the central module. It can be damaged if the lifting equipment is not attached carefully.

When attaching the lifting equipment and during transport, ensure that the central module is not damaged.

1. Attach suitable lifting equipment to the crane eyelet (1) provided for this purpose.

✓ The boiler can now be moved with a crane.

2. Remove the transport pallet.

✎ See section "Transporting with a pallet truck".

3. Transport the boiler to the desired installation site.
4. Place the boiler at the planned location while observing the minimum clearances.

✎ See section “4.2 Structural requirements”, under “Required room sizes and minimum clearances”.

5. Align the boiler with plastic plates or flat steel strips (not included in the scope of delivery) so that it is horizontal.

✓ The HDG F20-50 boiler has been placed in position.

Installing hydraulic connections

HDG F20-50

The following tasks must be performed if the HDG F20-50 is configured only as a log wood boiler.

If the boiler is intended for combined use with a pellet unit, proceed with section "HDG F20-50 Hybrid".

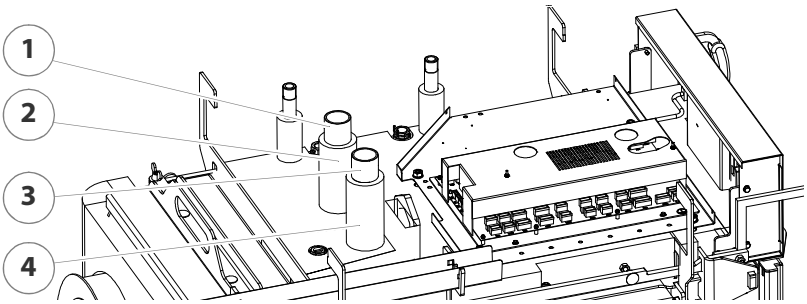

Figure 4/8 - Extending and insulating the connections

1. Extend the connection for the flow (1) and the return (3) using the double pipe nipple supplied.
2. Insulate the connection extensions with the insulating hoses supplied (2 + 4).

✓ The hydraulic connections are attached.

HDG F20-50 Hybrid

The following tasks must be performed if the boiler is intended for use as HDG F20-50 Hybrid in combination with an HDG K Hybrid pellet unit.

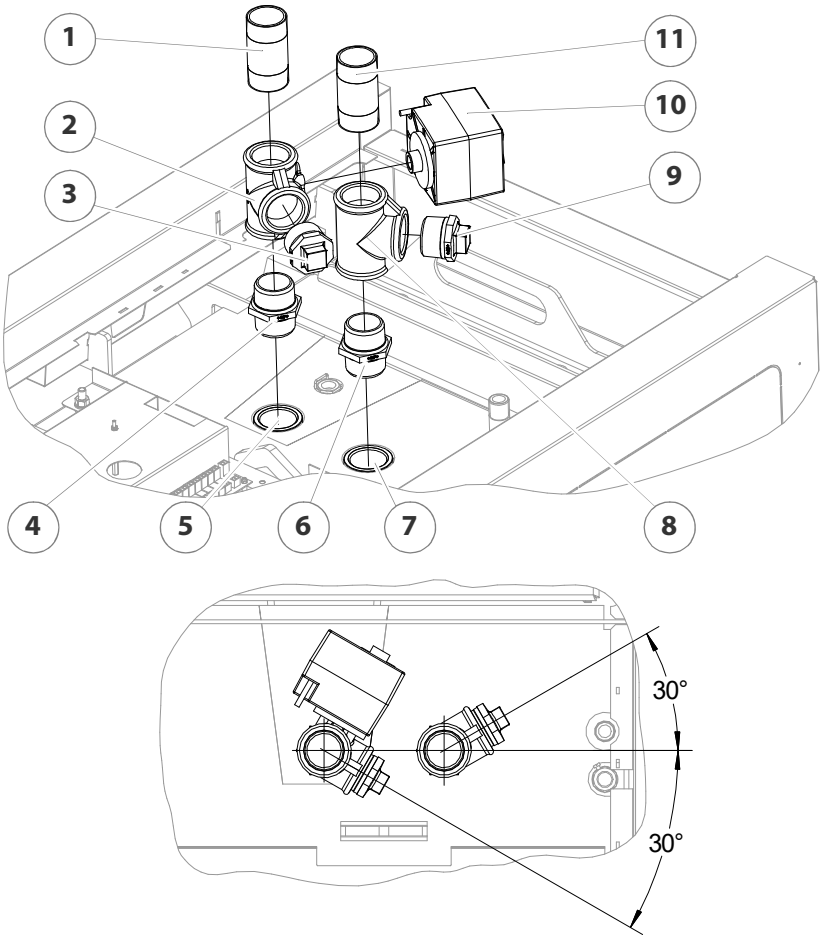

Figure 4/9 - Hydraulic connection set HDG F20-50 Hybrid

1. Mount the double nipple (4 + 6) on the connection for the flow (7) or the return (5).

Important!

When installing the three-way switch valve (2) and the T-piece (8), ensure the proper installation angle!

2. Install the three-way switch valve (2) on the double nipple (4).
3. Install the actuator (10) on the three-way switching valve (2) using the fastening screw.
4. Run the cable from the actuator (10) to the central module and insert the connector in the central module.

✎ See “Electrical plans for the HDG log wood boiler”.

5. Install the T-piece (8) on the double nipple (6).

Important!

If the pellet unit will be retrofitted at a later point in time, dummy plugs must be installed on the three-way switching valve (2) or T-piece (8).

6. Install the dummy plugs (3 + 9) on the three-way switching valve (2) or T-piece (2).
7. Install the pipe double nipple (1 + 11) on the three-way switching valve (2) or T-piece (2).

✓ The hydraulic connections are attached.

Important!

✎ For the further installation of the log wood/pellet combination HDG FK Hybrid, see the "HDG K hybrid operating manual".

INSTALLING THE HDG CONTROLS CONTROL UNIT

INSTALLING THE CONTROL UNIT

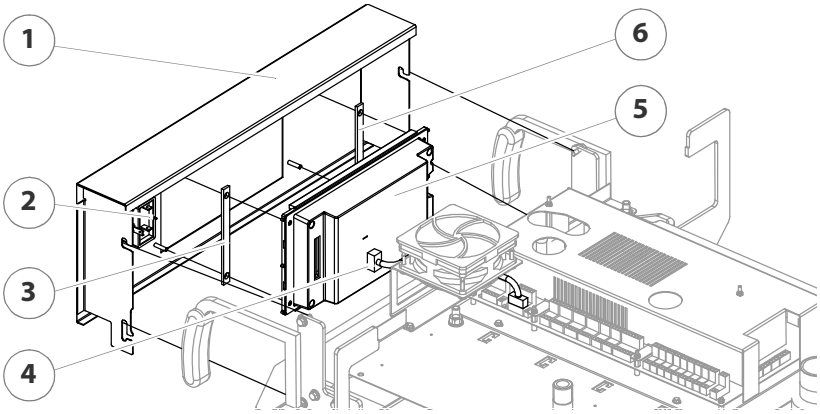

Figure 4/10 - Installing the control unit

Important!

Damage caused by improper disassembly

The overheat cut-off device (2) is already pre-mounted on the support plate (1), the line connected and the capillary tube of the overheat cut-off device sensor installed. When removing the support plate, the overheat cut-off device or the capillary tube may be damaged.

During disassembly of the support plate, ensure that the overheat cut-off device and the capillary tube are not damaged.

1. Undo the four lateral M5 screws (SW8) and carefully lift the support plate (1) out of the holder.

The two spacer plates are packed and delivered in cladding package 1.

2. From behind, set the two spacer plates (3 + 6) onto the welded screws on the support plate (1).
3. Move the HDG Control Touch control unit (5) from behind to the welded screws on the support plate (1).
4. Fasten the HDG Control Touch control unit (5) on the support plate (1) with the M4 nut (SW7).

5. Plug the connection cable (4) on the control unit HDG Control Touch (5) at slot X3.

✎ Also refer to “Electrical plans for the HDG log wood boiler”.

6. Mount the support plate (1) in the reverse sequence.

Flow/return and STL sensors

The flow/return and STL sensors are already installed upon delivery.

Extension module

Installing extension module EM4

Depending on the hydraulic application, an EM4 extension module may have to be used.

Important!

If the EM4 extension module is used, this must be installed on the top next to the central module. If extension module EM8 or EM8+4 is used alternatively or in addition, it must be installed on the external housing outside the boiler.

✎ For connecting the extension module, see the “Electrical plans for the HDG log wood boiler”.

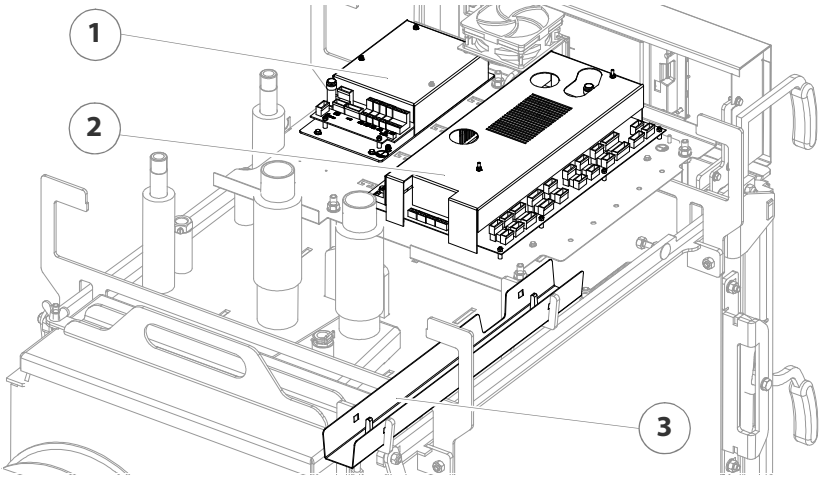

Figure 4/11 - Installing the EM4 extension module

1. Install the EM4 extension module (1) next to the central module (2).
2. Connect the EM4 (1) extension module.

✎ See “Electrical plans for the HDG log wood boiler”.

3. Install the cables and sensors on extension module EM4 according to the hydraulic wiring diagram.

✓ Extension module EM4 is installed.

Connecting the cables

Caution!

Malfunctions due to incorrect cabling

If live cables and sensor cables are installed in the same ducts, it can cause the sensors to malfunction.

Ensure that the live wires and the sensor cables are installed in different cable ducts (3).

1. Route all the cables and sensors to the central module and any extension module(s).
2. Connect all the cables on the central unit and any extension module(s).

✎ See “Electrical plans for the HDG log wood boiler”.

Please note that here only the assembly of the HDG controls unit is described.

The remaining electrical installations depend on the hydraulic system and can be installed based on the specifications for the respectively selected system.

✓ The HDG controls unit is now installed.

Installing the automatic ignition

The HDG automatic ignition is available as an option and not included in the standard scope of delivery.

Important!

Below, installation of the automatic ignition system is described on the right boiler side. Installation on the left side of the boiler is analogous.

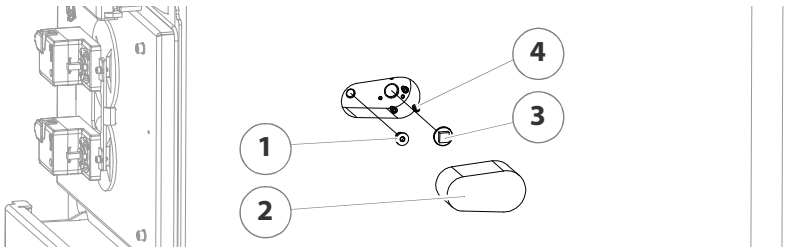

Figure 4/12 - Dismantling the cladding and dummy plugs

1. Remove the perforated insulation (2).
2. Remove the M8 hexagon socket screws (SW6) (1).
3. Tighten the three M5 hexagon socket screws (SW4) (4).
4. Remove the dummy plugs (square SW13) (3).

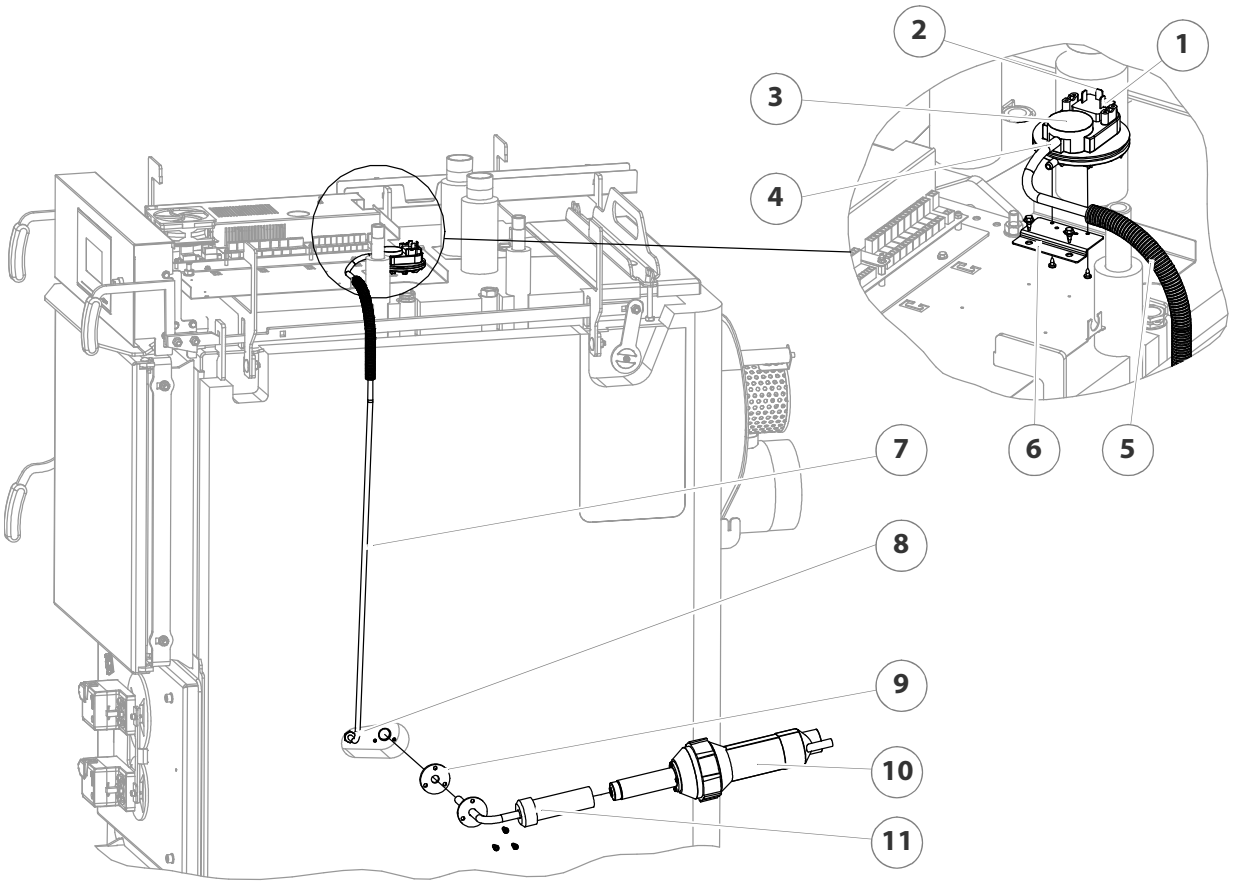

Figure 4/13 - Installing the differential pressure switch and ignition fan

5. Install the ignition pipe (11) with the seal (9) placed in between with the M5 hexagon socket screws (SW4) onto the connection provided on the boiler.
6. Mount the differential pressure switch (3) with the two self-tapping screws on the retaining plate (6).
7. Mount the retaining plate (6) with the two drilling screws (SW5,5) on the assembly plate.
8. Screw the hose nozzle (SW14) (8) into the connection for the differential pressure switch on the boiler.

Important!

Make sure that the silicone hose is fitted so that it does not come into contact with the ignition pipe.

9. Slide the empty pipe (5) in the area of the cleaning system lever over the silicone hose (7).
10. Insert the silicone hose (7) on the hose nozzle (8) and on the top connection on the differential pressure switch (4).
11. Insert the flat plug receptacle of the brown wire from the cable for the differential pressure switch into socket 1 (1).
12. Insert the flat plug receptacle of the white wire from the cable for the differential pressure switch into socket 3 (2).

13. Run the cable from the differential pressure switch (2) to the central module and plug it in at slot X34.

✎ Also refer to “Electrical plans for the HDG log wood boiler”.

14. Push the ignition fan (10) into the ignition pipe (11).

Important!

Make sure that the line from the ignition fan is fitted so that it does not come into contact with the ignition pipe.

15. Run the cable from the ignition fan (10) to the central module and plug it in at slot X52.

✎ Also refer to “Electrical plans for the HDG log wood boiler”.

✓ The automatic ignition is now installed.

INSTALLING THE AUTOMATIC CLEANING SYSTEM

The HDG automatic cleaning system is available as an option and not included in the standard scope of delivery.

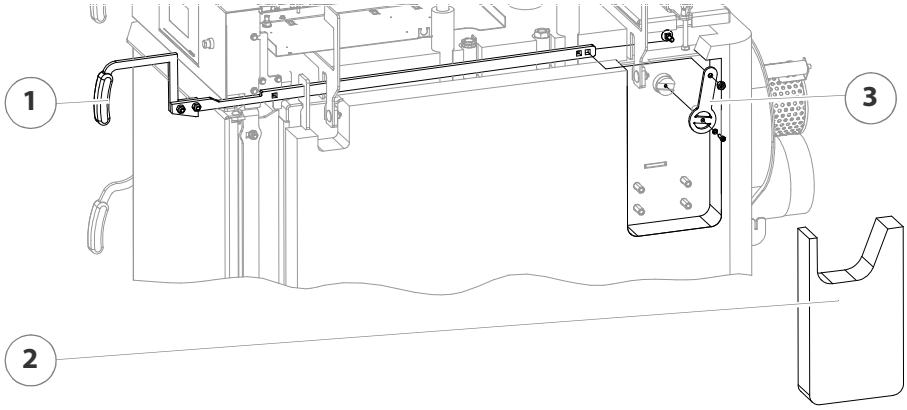

Figure 4/14 - Dismantling the cleaning system lever

1. Unscrew the M8 nut (SW13) and pull the actuating lever (1) of the cleaning system forward.
2. Unscrew the M5 hexagon socket screws SW4 and remove the small lever (3).
3. Remove the perforated insulation (2).

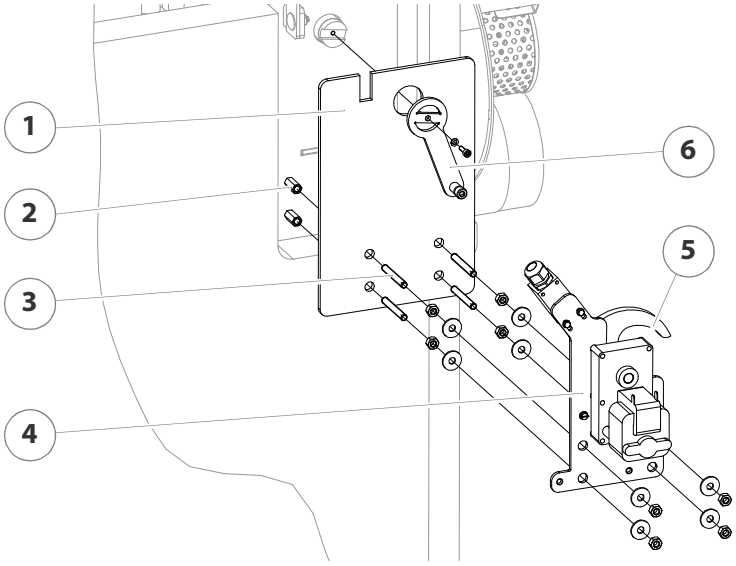

Figure 4/15 - Installing the cleaning system motor

4. Move the ceramic fibre plate (1) over the long nuts (2) to the boiler.
5. Install the small lever (6) with the M5 hexagon socket screws (SW4) and spring ring on the cleaning shaft.
6. Screw the M8 threaded pin (3) into the long nuts (2).
7. Screw the M8 nuts (SW13) onto the threaded pin (3).
8. Set the washers onto the threaded pin (3).
9. Install the support plate (4) for the cleaning system motor and the limit switch with the M8 screws (SW13) and the washers on the threaded pin (3).
10. With the help of the M8 nuts (SW13), set the spacing of the support plate (4) so that the hook (5) runs centred on the roller of the lever (6).
11. Run the cable from the cleaning system motor and from the limit switch to the central module and insert it at slot x50 or X33.

✎ Also refer to “Electrical plans for the HDG log wood boiler”.

✓ The automatic cleaning system is now installed.

Fitting the cladding

The cladding should only be installed after the water and flue-gas piping and electrical wiring.

The cladding packets are numbered chronologically. The number also corresponds to the order in which the cladding part is needed.

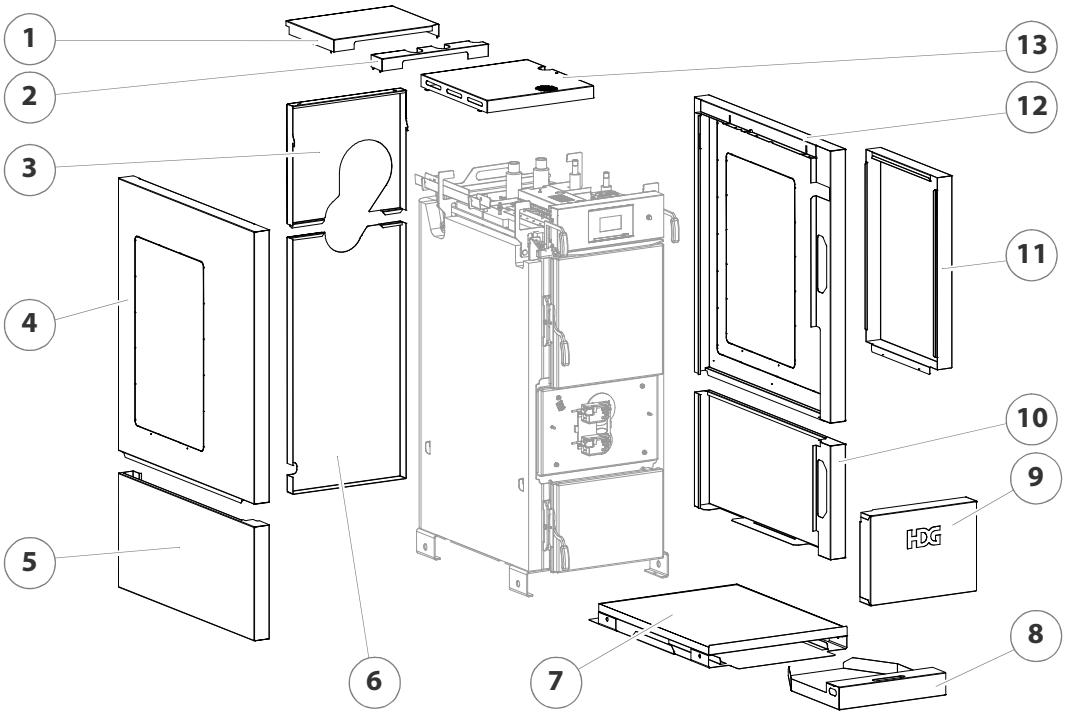

Figure 4/16 - Overview of cladding parts

1 Top rear cover
2 Top centre cover
3 Top rear cladding
4 Top left side cladding
5 Bottom left side cladding
6 Bottom rear cladding
7 Base plate
8 Ash pan
9 Front cladding
10 Bottom right side cladding
11 Automatic ignition/cleaning system cover (optional)
12 Top right side cladding
13 Top front cover

Base plate

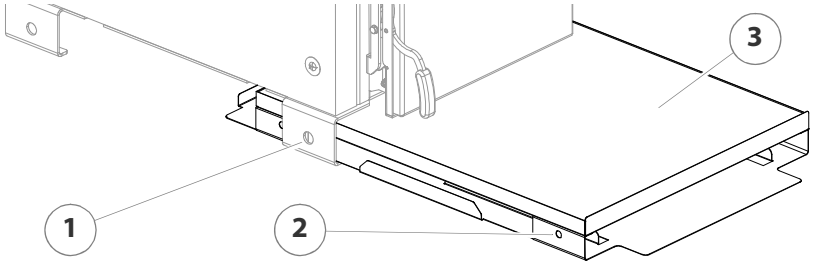

Figure 4/17 - Sliding in the base plate

1. Slide the base plate (3) under the boiler until the holes (3) in the base plate overlap into the recesses (1) in the base.

SIDE CLADDING

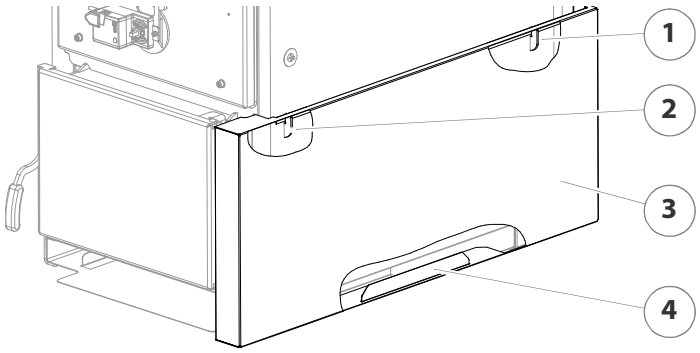

Figure 4/18 - Fitting the lower side cladding

2. Hang the lower side cladding (4) with the recess in the base plate (3) and in the two bottom cladding brackets (1 + 2).

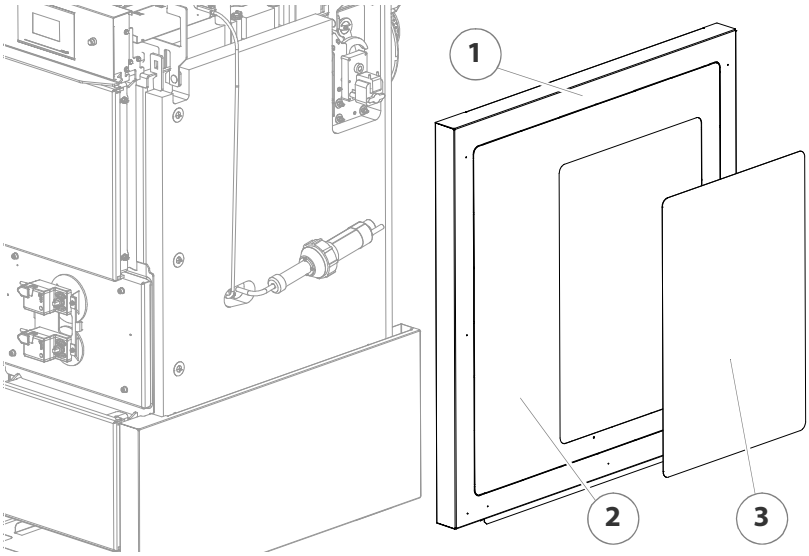

Figure 4/19 - Fitting the upper side cladding

Important!

The small perforated recess (3) only needs to be cleared out if the boiler is equipped with the HDG automatic ignition system and/or HDG automatic cleaning system.

The large perforated recess (2) only needs to be cleared out if the boiler is configured as HDG F Hybrid for combined use with a HDG K Hybrid pellet unit.

3. If necessary, clear out the small perforated recess (3) from the right side cladding (1) using a side cutter or hacksaw and deburr the opening.

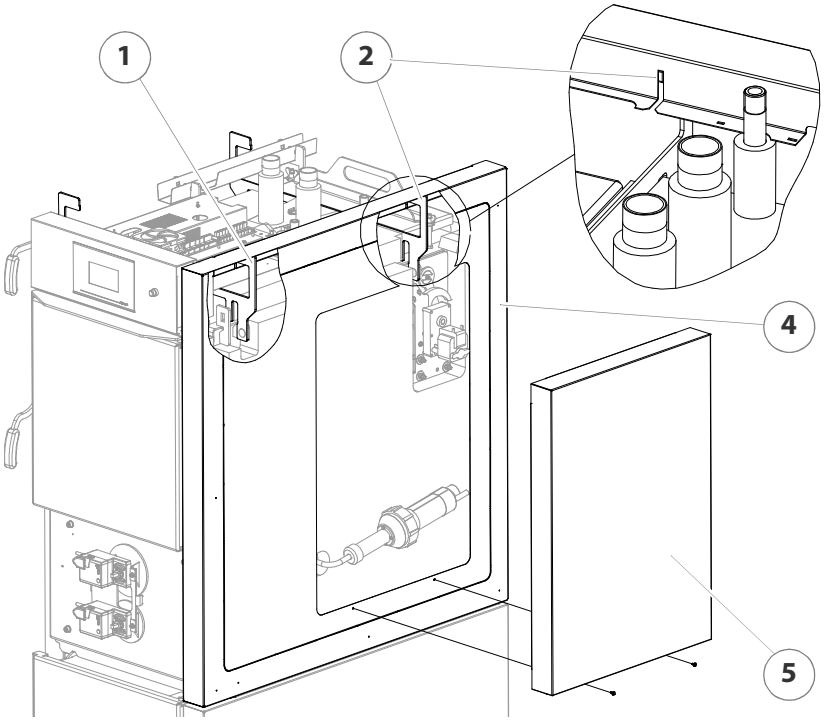

Figure 4/20 - Fitting the upper side cladding

4. Hang the upper side cladding (4) into the lower side cladding and into the two upper cladding brackets (1 + 2).
5. If necessary, hang the side cover (5) into the side cladding (4) and fasten it at the bottom with the two drilling screws.
6. Proceed in the same manner described above for fitting the cladding on the left side.

Rear cladding

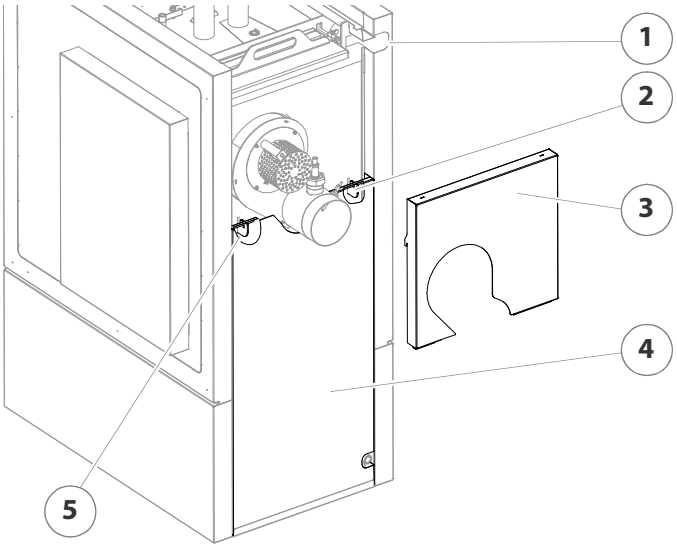

Figure 4/21 - Installing the rear cladding

7. Hang the lower rear cladding (4) into the base plate and into the two bottom cladding brackets (2 + 5).

Important!

Make sure that the cables for the flue gas fan, the lambda sensor and the flue gas temperature sensor are routed outside the rear cladding to the recess (1) in the side cladding.

8. Place the upper rear cladding (3) into the lower rear cladding and hang it into the two side claddings with the tabs.

Top and front cladding

Important!

The supper covers should only be mounted once all lnes and sensors have been installed and connected.

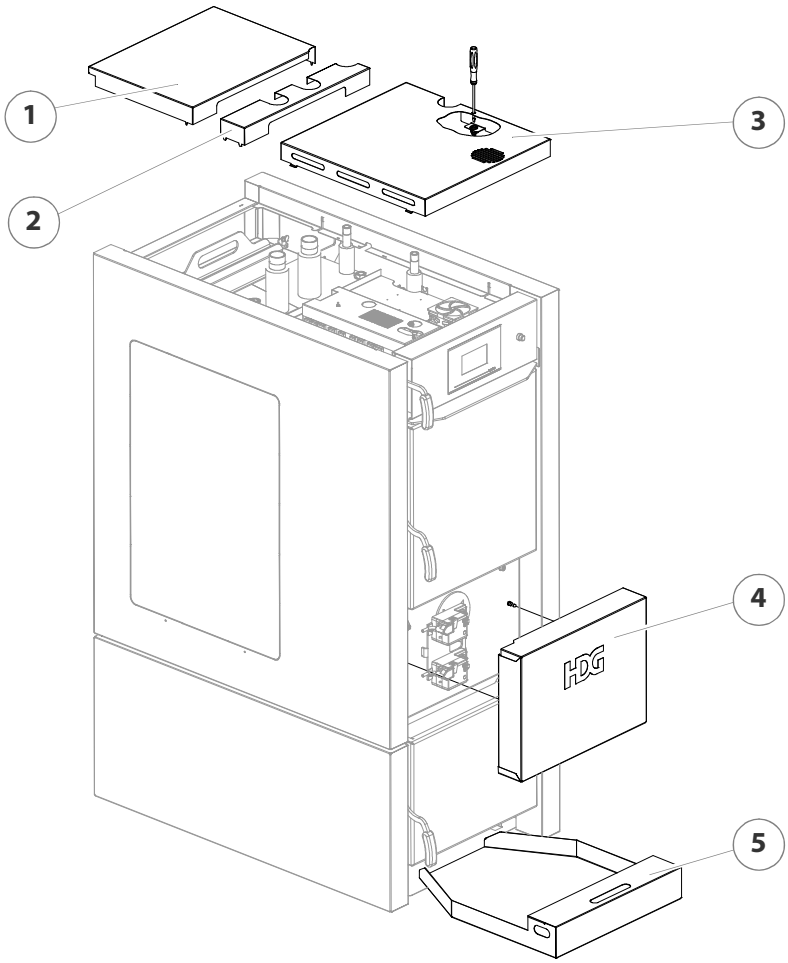

Figure 4/22 - Installing the top and front cladding

9. Put the top rear cover (1) with the tabs into the recesses of the left and right hand side cladding.
10. Put the top middle cover (2) with the tabs into the recesses of the left and right hand side cladding.
11. Put the top front cover (3) with the tabs into the recesses of the left and right hand side cladding and lock it with a flathead screwdriver.

12. Put the front cladding (4) onto the nipple on the boiler and ensure that the lines for the primary or secondary air actuator are led out through the recess on the top left.
13. Slide the ash pan (5) under the boiler in the base plate.

✓ The cladding is installed.

4.7 Connecting the chimney

1. Connect the flue gas pipe to the chimney connection.
2. Make sure that the connecting piece does not protrude into the chimney.
3. Seal the connection to the chimney with highly fireproof silicone or with a suitable mortar.

✓ The boiler is now connected to the chimney.

4.8 Electrical system

The electrical connections must be made in accordance with DIN IEC 60364 “Setting up low-voltage electrical installations”.

✎ The technical details are described in chapter “3 Mode of operation”, section “3.3 Technical data”.

✎ The circuit diagram is enclosed with the supplied documentation. This is created based on the system selected.

4.9 Water

Important!

The heating system must be filled with water in accordance with VDI guideline 2035, “Avoiding damage in hot water heating systems”.

Before putting the system into operation, the pressure of the diaphragm expansion vessel must be adjusted for the conditions in the heating system and in the building.

After putting the system into operation, heat up the system to the maximum boiler temperature and bleed air from the system again to make sure that there are no air pockets.

4.10 Connecting the thermal safety device

In accordance with DIN EN 12828, heating systems must be equipped with safety devices to prevent the maximum operating temperature from being exceeded. The safety heat exchanger serves to protect the boiler against overheating and may not be used for other purposes (i.e. as a regular heat exchanger). If the heat transfer capacity is suddenly lost (for example, if the circulation pump for raising the return temperature fails), heat production cannot be stopped as quickly as with an oil- or gas-fired boiler. When the maximum operating temperature is exceeded, the thermal safety device (TAS) is triggered and cold water flows through the safety heat exchanger. The resulting excess energy is thus dissipated by this "emergency cooling". (This is an alternative to fast regulation.)

However, the safety heat exchanger and thermal safety device can only serve their purpose if the following requirements have been met:

- A flow pressure of at least two bar must be available at the cold water inlet of the safety heat exchanger.

Mains-dependent, stand-alone supply systems are not safe enough due to dependence upon the power supply!

- The distance between the supply and return lines of the thermal safety device and the safety heat exchanger should not be less than their nominal width. The supply line may not be equipped with a shut-off valve.
- Water must be able to flow freely through the system.
- The flow pressure at the flue pipe connection on the boiler may not significantly exceed the prescribed value.

The TAS must be inspected annually by a qualified technician to test that it is working properly.

The thermal safety device must be installed according to guidelines from HDG Bavaria.

Important!

In order to prevent leaks, avoid turning the connections of the safety heat exchanger anticlockwise when installing the thermal safety device.

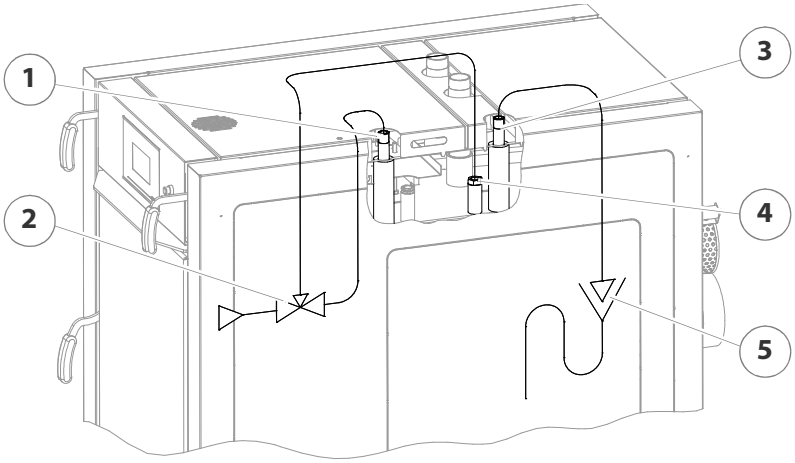

Figure 4/23 - HDG F20-50 thermal safety device

1 Safety heat exchanger inlet (DN 15 outsize thread)
2 Thermal safety device (TAS)
3 Safety heat exchanger outlet (DN 15 outside thread)
4 Connection bushing for TAS immersion sleeve, DN 15 inside thread
5 Runoff connection to drainage system

5 Commissioning

The heating system is initially commissioned by specialists from HDG Bavaria or from an authorised HDG partner.

Commissioning includes an introduction to the operation and maintenance of the heating system as well as measurements to determine exhaust emissions and combustion performance.

Danger!

Material damage and injury due to incorrect commissioning

Commissioning the system requires comprehensive expertise. If this commissioning is done by an untrained person, the heating system could be damaged.

Only allow authorised specialists to perform the commissioning.

5.1 Requirements

The following requirements must be met to ensure there are no problems during commissioning.

- The boiler is installed properly.
- The heating system has been filled with water as specified.
- The heating system has been bled.
- The pressure of the membrane expansion vessel has been adapted to on-site conditions.
- All required DIN EN 12828 safety devices have been installed and are ready for operation.
- The power supply to all components is ensured. (Makeshift solutions are not sufficient!)
- The chimney installation corresponds to the legal regulations.
- All doors and openings on the boiler and on the chimney connection pipe have been checked for a proper seal.
- Air supply for combustion has been provided.
- A sufficient amount of fuel is available.

5.2 Procedure

✎ See the “HDG Control” operating manual, chapter “Commissioning the system”.

Switching on the heating system

1. Switch on the circuit breaker for the mains electricity supply, or otherwise ensure the unit is provided with power.
2. Turn on the emergency heating switch (if one has been installed).

✓ The heating system is now under voltage.

✓ The indicator lamp in the emergency heating switch will light up.

✓ The control is activated.

✎ See the “HDG Control” operating manual, chapter “Commissioning the system”.

Testing system components

Important!

For safety reasons, the system component test may only be conducted when there is no fuel in the boiler and there are no remaining embers.

The system component test can only be conducted in the “*Boiler OFF*” state.

Procedure

✎ See the “HDG Control” operating manual.

Depending on the hydraulic system selected, the system component test must be performed for additional components.

6 Using the heating system

6.1 Control unit for HDG controls

✎ You can find all information and instructions for setting up and operating the boiler and weather-compensated heating control of the HDG controls in the “HDG controls” operating manual.

The HDG controls control unit is located on the front of the HDG F20-50 boiler.

6.2 Switching on the heating system

Requirements

✎ See the “HDG Control” operating manual, chapter “Commissioning the system”.

In order for the heating system to be switched on, it must first have been put into service by an authorised specialist.

Emergency heating switch

The system is connected to the mains supply through an emergency heating switch (provided by the customer) or through a circuit breaker in the mains distribution box of the building.

Danger!

Dangerous electrical current or voltage

The heating system can only be completely de-energised by switching off the mains circuit breaker or the emergency heating switch.

1. Switch on the heating system at the corresponding circuit breaker or the emergency heating switch provided by the customer.

✓ The heating system is now under voltage.

✓ The control is activated.

✓ The heating system is switched on and ready for operation.

Fuel selection

Important!

When changing fuel, e.g. from softwood to hardwood, please also consider the consequential changes in respect of the combustion properties. Otherwise faults may occur in the combustion and in the operation of the heating system.

If necessary, the settings of the heating system must be adjusted for the changed fuel.

6.3 Heating up the system

General information

Caution!

Hot surfaces

Contact with the hot surfaces of the boiler (e.g. inside doors) can result in burns.

Wait until the boiler has cooled down before touching non-insulated components.

Warning!

Danger of asphyxiation due to carbon monoxide

If the boiler is operating, carbon monoxide can be emitted through open doors.

Do not leave the doors open any longer than necessary.

Caution!

Danger of fire

When the boiler is in operation, open doors constitute a fire danger.

Do not leave doors open any longer than necessary and never leave them open unattended. Check that the hatches are closed every time you heat or reload.

Danger!

Danger of explosion

A concentration of carbon monoxide that is too high can result in an explosion.

Observe the flue draught requirement of the chimney.

We recommend wearing leather gloves when heating up the system.

Requirements

Caution!

Damage caused by unintended fuel fomentation

Residual embers in the fuel chamber can lead to unintended fuel fomentation. This can cause the heating system to overheat and, subsequently, for dangerous operating conditions to arise.

Ensure when filling that residual embers do not under any circumstances remain in the fuel chamber.

When the *Reload* indicator lights up, there are no more embers in the fuel chamber.

Procedure

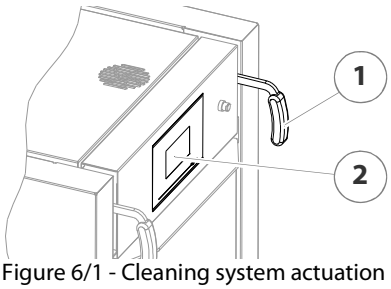

Figure 6/1 - Cleaning system actuation

1. Pull the actuating handle (1) of the cleaning system 4-5 times to clean the upright heat exchangers.

2. Press the *Reload* button on the HDG Control Touch control unit (2).

✓ The *Fill up / Reload* window appears in the display.

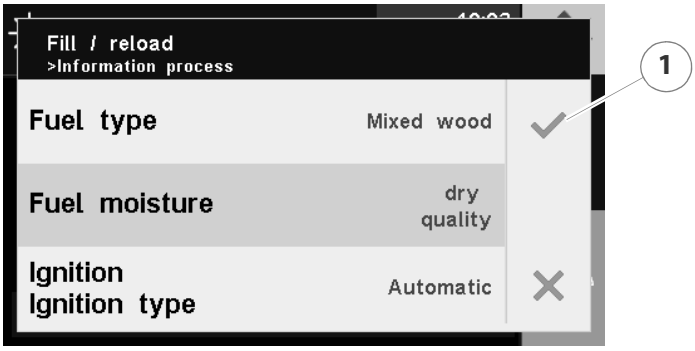

Figure 6/2 - Ignition - changing settings

3. If you do not want to change any settings, confirm your input by pressing the *Confirm* button (1).

✓ The *Do not open fuel chamber door* message appears in the display.

✓ The flue gas fan is running.

4. **Continue without changing the settings with point 18.**

CHANGING THE SETTINGS

5. If you wish to change the settings, press the appropriate setting.
6. Press the *Wood type*.

✓ The *Wood type selection* window appears in the display.

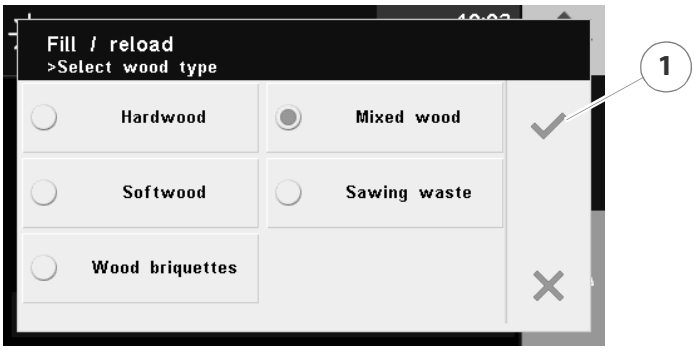

Figure 6/3 - Query wood type

7. Select the type of wood used.
8. Confirm your input by pressing the *Confirm* button (1).

✓ The *Fill up / Reload* window appears in the display again.

9. Press *Wood moisture*.

✓ The *Wood moisture selection* window appears in the display.

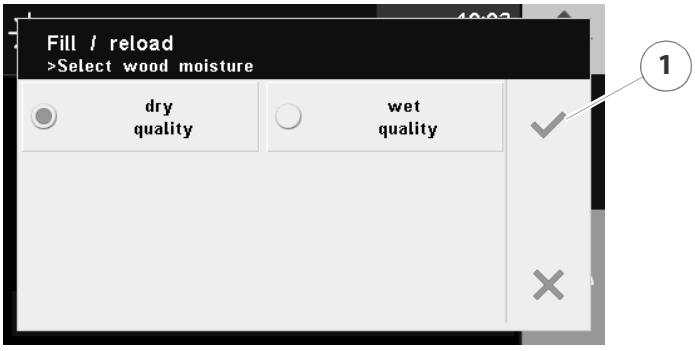

Figure 6/4 - Query wood moisture

10. Select the wood moisture of the fuel.
11. Confirm your input by pressing the *Confirm* button (1).

✓ The *Fill up / Reload* window appears in the display again.

12. Press the *Ignition mode*.

✓ The *Ignition mode selection* window appears in the display.

Ignition modes

- Manual: The fuel is ignited manually (with firelighters).
- Electrical: The fuel is automatically ignited by the ignition fan directly after filling, regardless of the accumulator temperature, weekly programme or consumer requirement.
- Automatic: The fuel is automatically ignited depending on the selected setting (accumulator temperature, weekly programme or consumer requirement)

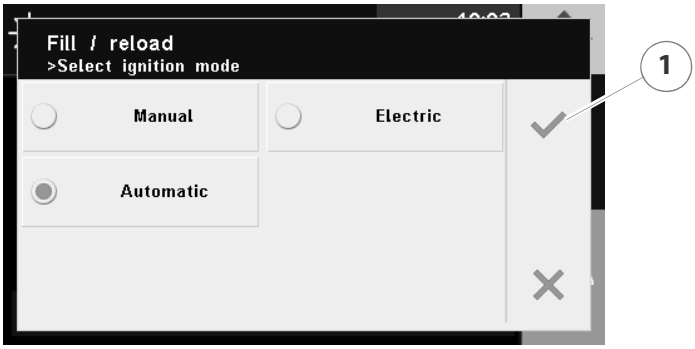

Figure 6/5 - Query ignition mode

13. Select the desired ignition mode.

14. Confirm your input by pressing the *Confirm* button (1).

✓ The display shows - for prior selection of *Automatic* ignition mode - the *Automatic ignition selection* window.

Automatic ignition

- Accumulator temperature: The automatic ignition starts after the set reloading temperature is undershot.
- Accumulator temperature and weekly programme: The automatic ignition starts after the set accumulator temperature is undershot and if the enable time is reached at the same time in accordance with the set weekly programme.
- Accumulator temperature and requirement: The automatic ignition starts after the set accumulator temperature is undershot and if there is a requirement from a consumer (heating circuits, domestic hot water) at the same time.
- Accumulator temperature, requirement and weekly programme: The automatic ignition starts after the set accumulator temperature is undershot and if there is a requirement from a consumer (heating circuits, domestic hot water) at the same time and the enable time is reached in accordance with the set weekly programme.

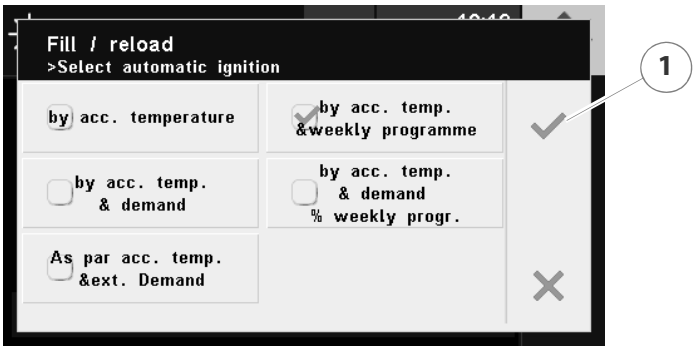

Figure 6/6 - Query automatic ignition

15. Select the type of automatic ignition.

16. Confirm your input by pressing the *Confirm* button (1).

✓ The *Fill up / Reload* window appears in the display again.

Figure 6/7 - Ignition - changing settings

17. Confirm your input by pressing the *Confirm* button (1).

✓ The *Do not open fuel chamber door* message appears in the display.

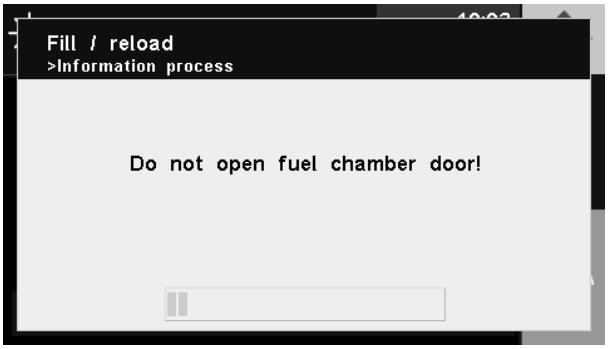

Figure 6/8 - Do not open the fuel chamber door

✓ The flue gas fan is running.

DO NOT CHANGE THE SETTINGS ÄNDERN

18. Wait until the progress bar is full.

✓ The *Open fuel chamber door to safety position* message appears in the display.

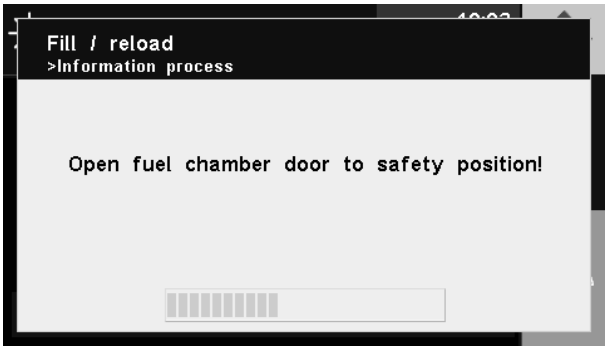

Figure 6/9 - Opening the fuel chamber door to the safety position

19. Open the fuel chamber door to the safety position.

20. Wait until the progress bar is full.

✓ The *Open fuel chamber door slowly* message appears in the display.

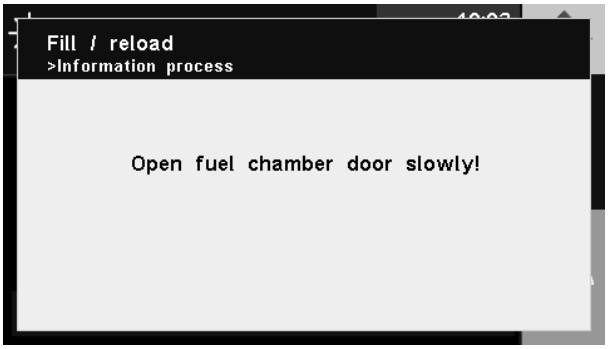

Figure 6/10 - Open the fuel chamber door slowly

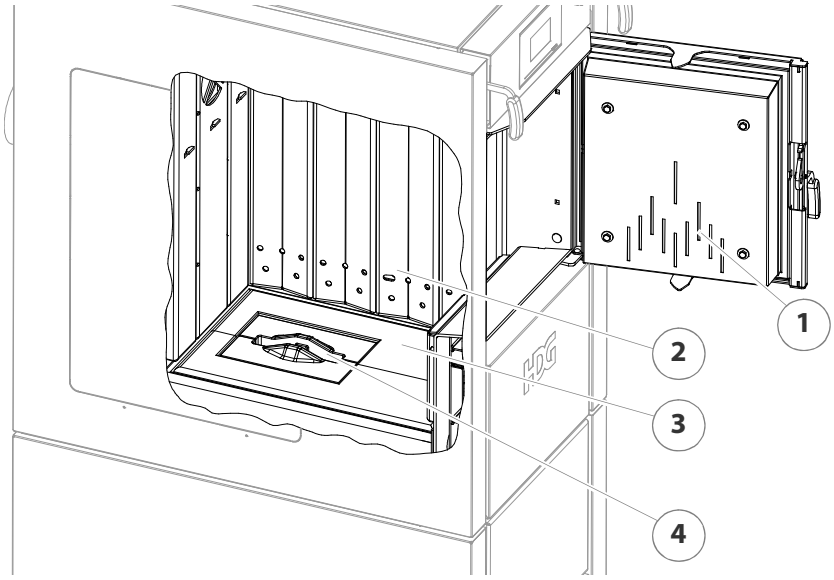

Figure 6/11 - Filling the fuel chamber

21. Open the fuel chamber door (1).
22. Leave any unburnt pieces of wood and charcoal in the fuel chamber (3).

For kindling, we recommend log wood with a diameter of D5 (2–5 cm).

MANUAL IGNITION

23. Stack some highly flammable material (small pieces of dry wood) about 10 cm high on the burner nozzle (4) so that it is covered.
24. Lay some small pieces of cardboard on top of the wood inside the fuel chamber (3).

We recommend using bio-firelighters consisting of wood shavings soaked in paraffin. In contrast to newsprint, these firelighters are smokeless, odourless and free of pollutants.

25. Ignite the fuel.
26. Allow the fuel to generate a good fire.

Only put in as much wood as the heating system and accumulator can absorb as energy.

27. Fill up the fuel chamber (3) with fuel.
28. Close the fuel chamber door (1).
29. The message *Fill fuel chamber and confirm ignition* is displayed.

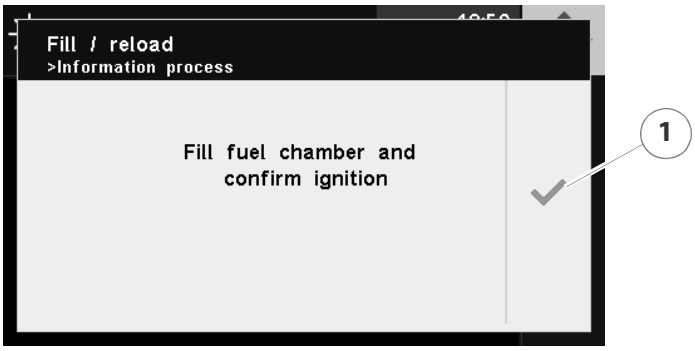

Figure 6/12 - Filling the fuel chamber and confirming ignition

30. Confirm your input by pressing the *Confirm* button (1).

✓ The *Close doors* message appears in the display.

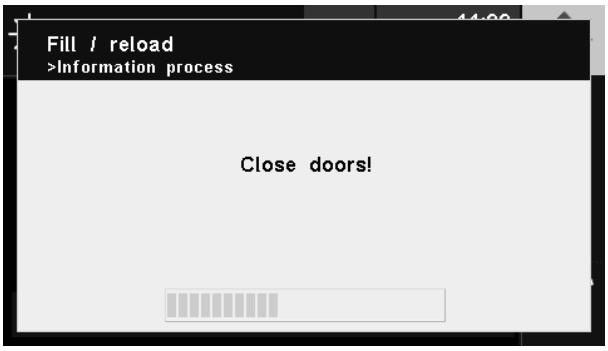

Figure 6/13 - Closing the doors

31. Make sure that all of the doors are closed.
32. Wait until the progress bar is completely full.
33. The *Ignite* message appears in the display.

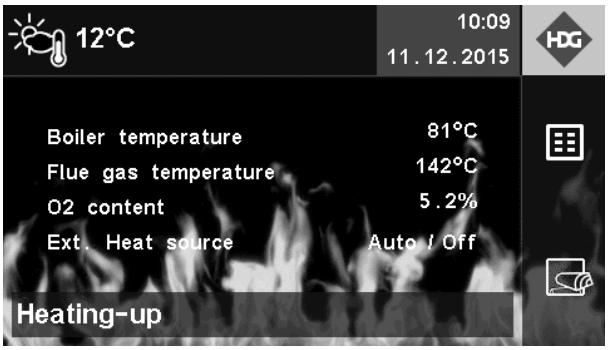

Figure 6/14 - Ignition

✓ The HDG F20-50 boiler is now heated up.

ELECTRIC IGNITION

24. Stack some highly flammable material (small pieces of dry wood) in front of the igniter gun (2) and about 10 cm high on the burner nozzle (4) so that it is covered.

25. Lay some small pieces of cardboard in front of the igniter gun (2) on the wood inside the fuel chamber (3).

Only put in as much wood as the heating system and accumulator can absorb as energy.

26. Fill up the fuel chamber (3) with fuel.
27. Close the fuel chamber door (1).
28. The message *Fill fuel chamber and confirm ignition* is displayed.

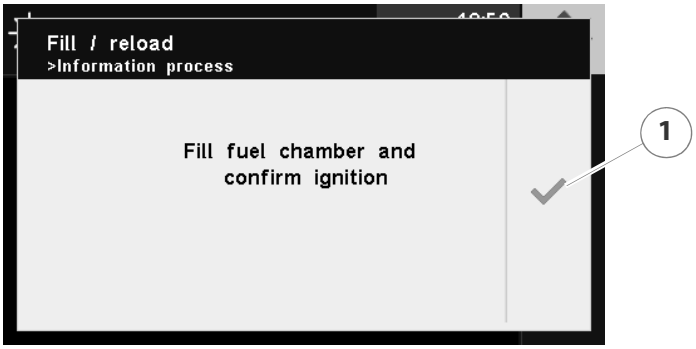

Figure 6/15 - Filling the fuel chamber and confirming ignition

29. Confirm your input by pressing the *Confirm* button (1).

✓ The *Close doors* message appears in the display.

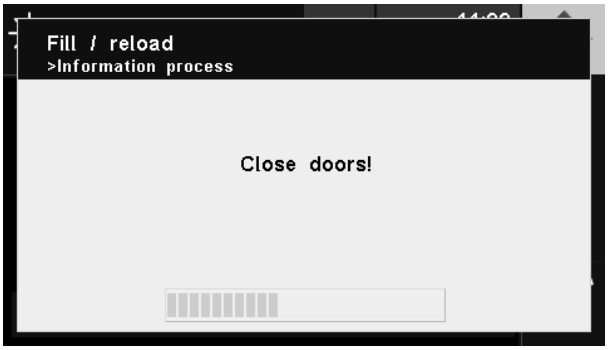

Figure 6/16 - Closing the doors

30. Make sure that all of the doors are closed.
31. Wait until the progress bar is full.

✓ The *Underpressure test* message appears in the display.

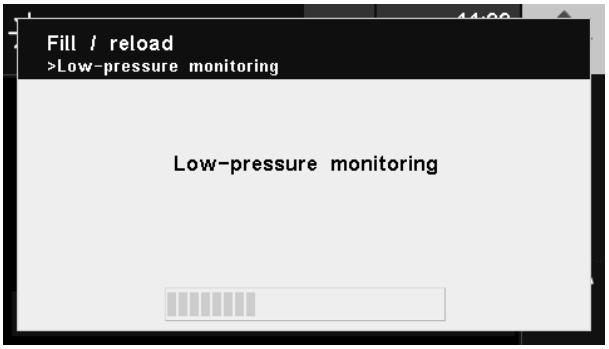

Figure 6/17 - Underpressure test

32. Wait until the progress bar is full.

The differential pressure switch enables the ignition fan if the preset underpressure is reached.

✓ The ignition fan starts.

✓ The *Ignite* message appears in the display.

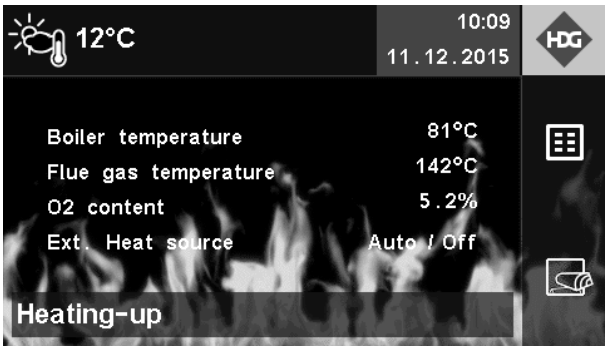

Figure 6/18 - Ignition

✓ The HDG F20-50 boiler is now heated up.

AUTOMATIC IGNITION

24. Stack some highly flammable material (small pieces of dry wood) in front of the igniter gun (2) and about 10 cm high on the burner nozzle (4) so that it is covered.

25. Lay some small pieces of cardboard in front of the igniter gun (2) on the wood inside the fuel chamber (3).

Only put in as much wood as the heating system and accumulator can absorb as energy.

26. Fill the fuel chamber (3) according to the percentage specified on the display.

27. Close the fuel chamber door (1).

28. The message *Fill fuel chamber and confirm ignition* is displayed.

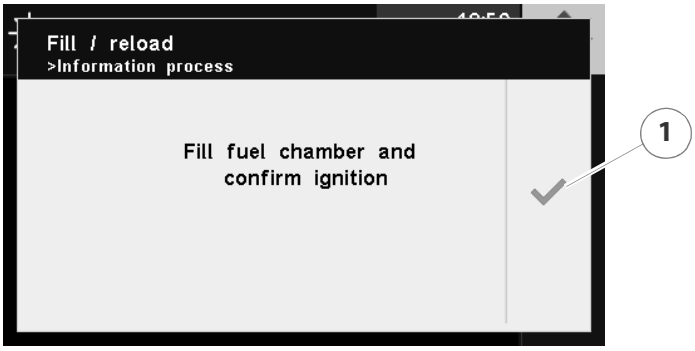

Figure 6/19 - Filling the fuel chamber and confirming ignition

29. Confirm your input by pressing the *Confirm* button (1).

✓ The *Close doors* message appears in the display.

Figure 6/20 - Closing the doors

30. Make sure that all of the doors are closed.

31. Wait until the progress bar is full.

✓ The *Ready for ignition* message appears in the display.

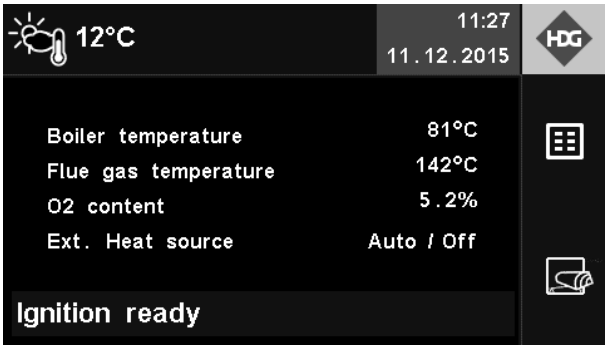

Figure 6/21 - Ready for ignition

✓ The HDG F20-50 boiler is ready for automatic ignition.

6.4 Performing a chimney sweep measurement

In Germany, there is a legal requirement that heating systems with nominal thermal power in excess of 4 kW be inspected annually by a qualified combustion engineer to see that federal emission limits for small and medium-sized boiler systems are met (1st Federal Emission Control Ordinance).

INITIAL TEST

The operating company must notify the responsible combustion engineer of the installation of the heating system before it is commissioned, and must also arrange an appointment for the chimney sweep test within four weeks of commissioning. To ensure a stable operating ability, sufficient heat transfer must occur while operating at full load.

TEST EVERY TWO YEARS

In Germany, regular inspections every two years must be carried out in accordance with the requirements of the federal emission limits (1.BImSchV).

Caution!

Material damage and injury due to incorrect chimney sweep test

The chimney sweep test requires comprehensive technical knowledge.

Only allow authorised specialists to perform the chimney sweep test.

BEFORE THE TEST

1. Clean the heating system completely about three to four days before the chimney sweep test.

✎ See chapter “7 Cleaning and servicing the heating system”, section “7.1 Cleaning and servicing schedule”.

2. Clean the lambda sensor and check that it is securely mounted, tighten if necessary.

✎ See chapter “7 Cleaning and servicing the heating system”, section “7.1 Cleaning and servicing schedule”.

ON THE DAY OF THE TEST

Important!

- The boiler must have been heated at least once during the period between the cleaning and the chimney sweep test.
- Oak wood, wood briquettes, boards, scrap wood and wood chips are not suitable for the chimney sweep test.
- At the start of the test the boiler temperature should not be below 60 °C. The temperature of the accumulator should not be higher than 60°C. Ensure that the heating circuit has sufficient heat transfer capacity.
- The heating system must be fitted with a chimney draught regulator to ensure that the maximum permissible flue draught requirement of 20 Pa is not exceeded.
- At the start of test, the residual oxygen value should be below 6%.
- Having the test repeated by the combustion engineer or by HDG specialists will incur charges.

1. On the day of test, heat up the boiler one hour before the scheduled appointment.

✎ See chapter 6 “Using the heating system”, section 6.3 “Heating up the heating system”.

2. Only fill the fuel chamber up half way.

3. Use log wood according to fuel recommendation (split, dry wood) with a length of 50 cm, a maximum diameter of maximum 10 cm and a maximum water content of 20%.

During the test

Danger!

Danger of asphyxiation and explosion from carbon monoxide

When the boiler is in operation, carbon monoxide can be emitted through the open doors or lids and lead to an explosion.

Always keep the doors and lids closed. Do not leave them open any longer than necessary and never leave them open unattended.

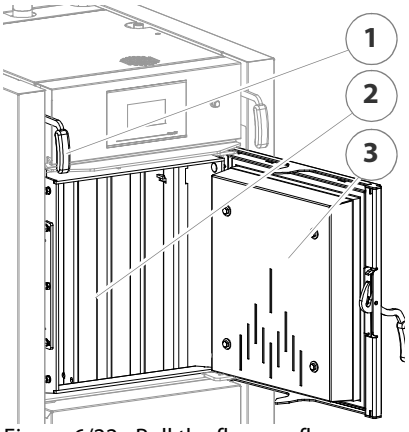

Figure 6/22 - Pull the flue gas flap

1. Open the fuel chamber door (3) slowly.
2. Pull the actuating handle (1) of the flue gas flap to the front until it latches into place.
3. Carefully tamp the embers and remaining logs together in the fuel chamber (2) in the presence of the chimney sweep.

Important!

The bed of embers must come up to over the burner nozzle!

4. Fill the fuel chamber (2) half way up evenly and densely with logs according to the fuel recommendation.
5. Close the fuel chamber door (3).

✓ The actuating handle (1) is released from its lock and the flue gas flap closes.

6. Wait about 10 - 15 minutes and then start the HDG controls chimney sweep test.
7. Press the *Main menu* button in the standard display.

✓ The display switches to the main menu.

8. Press the *Messages / Maintenance* field.

✓ The display switches to the *Messages / Maintenance* area.

9. Press the *Chimney sweep test* field.

✓ A security query appears.

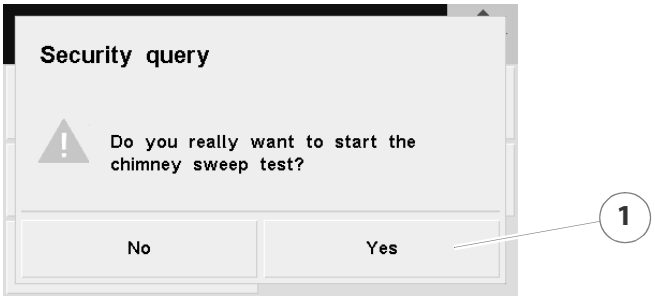

Figure 6/23 - Chimney sweep test security query

10. Press *Yes* (1).

✓ The display switches to the chimney sweep test.

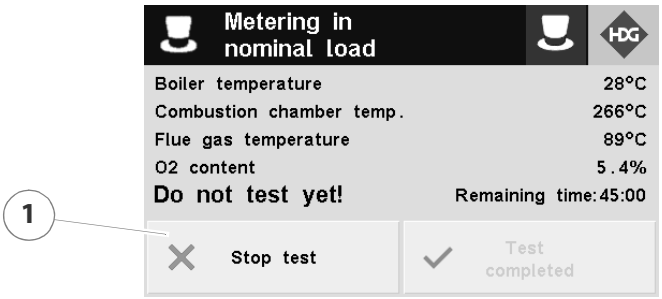

Figure 6/24 - Chimney sweep test

✓ All heating components are activated for heating components.

✓ *Do not test yet!* is shown on the display

Pressing the *Cancel test* button (1) cancels the chimney sweep test.

11. Hold off with the test until the thresholds set for the boiler temperature and for the combustion chamber temperature have been exceeded.

✓ The display will then show *Measurement done*.

✓ The chimney sweep test can be started.

If you do not change the operating mode within 45 minutes, the heating system will automatically return to the previous operating mode.

6.5 Switching off the heating system for repair work

1. Allow the fire in the boiler to burn out and cool off.

Important!

Frost danger

Only completely shut off the power to the heating system if the danger of frost can be ruled out.

2. Switch the heating system off.

✎ See the “HDG Control” operating manual, chapter “5 Using the control unit”, section “5.3 Switching off the heating system”.

There is still electrical voltage in the system.

3. Switch off the emergency heating switch (if installed) or the corresponding mains electricity circuit breaker.

✓ The heating system is switched off and without current.

6.6 Troubleshooting

If a fault occurs in the heating system, this is shown in the display of the HDG controls.

✎ See the “HDG Control” operating manual, chapter 10 “Troubleshooting”.

7 Cleaning and servicing the heating system

GENERAL INFORMATION

To ensure fault-free and safe operation, certain cleaning and maintenance work is necessary. This effort will also help you avoid expensive repairs, provided you observe the recommended intervals.

The cleaning and maintenance work can also be performed by an authorised specialist heating company where a servicing contract has been concluded.

SPARE PARTS

Only use genuine HDG spare parts. You can obtain HDG spare parts from your specialist heating company.

7.1 Cleaning and servicing schedule

The specified cleaning intervals are guidelines.
These intervals may vary according to the quality of the fuel and the power used by the heating system.

Interval	Component	See page ...
Weekly / as required	• Clean the fuel chamber and secondary air openings • Clean the secondary combustion chamber and ash compartment	67 69
Every 6 months (approx. 900 operating hours)	• Check and clean the lambda sensor • Clean the flue gas temperature sensor	70 71
Annually (approx. 1800 operating hours)	• Clean the flue gas pipe • Clean the cleaning system, heat exchanger surfaces and flue gas flap • Clean the flue gas fan • Clean air control unit • Clean the panels • Inspect the door seals for leaks • Clean the ignition fan	72 72 76 77 77 78 80

Table 7/1 - Cleaning and servicing schedule

7.2 Procedure

Generally applicable safety instructions

Warning!

Danger of asphyxiation due to carbon monoxide

When the boiler is in operation, carbon monoxide can be emitted through the open doors, lids or other cleaning openings.

When performing cleaning and maintenance work, do not leave the cleaning openings, doors and lids open any longer than necessary.

Caution!

Danger of burns from hot surfaces

During operation, the boiler surfaces under the cladding are hot. Even when turned off, they only cool down slowly.

Switch the heating system off and only start with the cleaning and maintenance work when the surfaces have cooled down.

Warning!

Danger of fire

When the heating system is in operation, open doors and lids constitute a fire hazard.

Always keep the doors and lids closed. Only open them when the boiler has finished burning. Do not leave them open any longer than necessary and never leave them open unattended.

Warning!

Danger of fire from combustion residues

The combustion residue (ash, coal, etc.) can catch fire again after being removed from the boiler.

Let the combustion residue cool off before you vacuum and put the ashes in an appropriate, non-flammable container.

Important!

Before the start of the cleaning and maintenance tasks, the display of the HDG Control Touch control unit must show the *Ready* message.

Cleaning tools

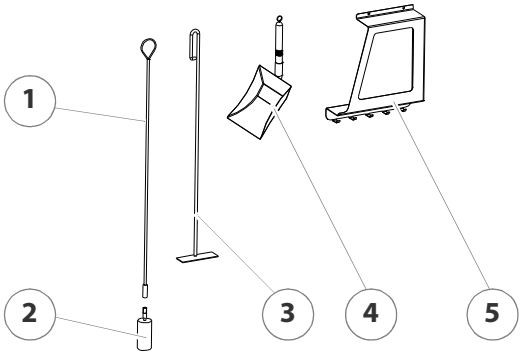

Figure 7/1 - Cleaning tools

1 Brush handle
2 Cleaning brush
3 Scraper
4 Ash shovel
5 Wall holder

Cleaning the fuel chamber and secondary air openings

Important!

✎ Observe the “Generally applicable safety instructions” in this section.

1. Allow the fire in the boiler to burn out and cool off.

1. Press the *Reload* button on the HDG Control Touch control unit.
2. The *Fill up / Reload* window appears in the display.
3. Confirm your entry by pressing the *Confirm* button.

✓ The *Do not open fuel chamber door* message appears in the display.

✓ The flue gas fan is running.

4. Wait until the progress bar is full.

✓ The *Open fuel chamber door to safety position* message appears in the display.

5. Open the fuel chamber door to the safety position.
6. Wait until the progress bar is full.

✓ The *Open fuel chamber door slowly* message appears in the display.

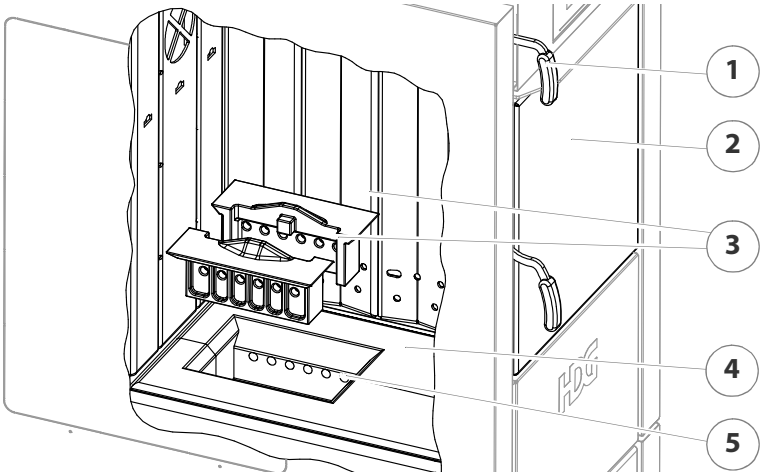

Figure 7/2 - Cleaning the fuel chamber and secondary air openings

7. Open the fuel chamber door (2).
8. Pull the actuating lever (1) of the flue gas flap to the front until it latches into place.
9. Check the fuel chamber (4) for ash and any other dirt and, if necessary, remove this from the fuel chamber using the supplied cleaning tools.
10. Leave any unburnt pieces of wood and charcoal in the fuel chamber (4).
11. Remove the two-piece burner nozzle (3).
12. Clean the secondary air openings (5) with the cleaning tool supplied or with a vacuum cleaner.
13. Carefully reinsert the burner nozzle (3).
14. Close the fuel chamber door (2).

✓ The actuating lever (1) of the flue gas flap is unlocked.

15. Press the *Confirm* button on the display.

✓ On the display of the control unit, the *Ready* message appears.

✓ The fuel chamber and the secondary air openings have been cleaned.

CLEANING THE SECONDARY COMBUSTION CHAMBER AND THE ASH COMPARTMENT

Important!

✎ Observe the "Generally applicable safety instructions" in this section.

During the heating period, the secondary combustion chamber and the ash compartment must be cleaned two to three times a week.

1. Allow the fire in the boiler to burn out and cool off.
2. Press the *Reload* button.

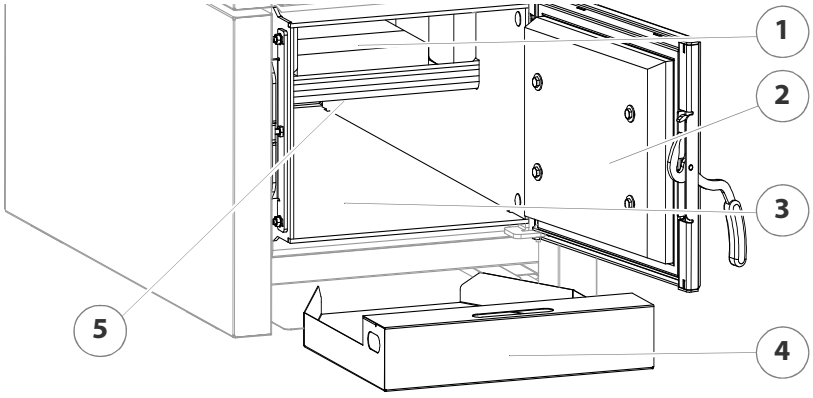

Figure 7/3 - Cleaning the secondary combustion chamber and the ash compartment

3. Pull out the ash pan (4) approx. 30 cm.
4. Open the combustion chamber door (2).
5. Check the secondary combustion chamber (1) and the ash compartment (3) for ash and any other dirt.
6. Remove any deposits on the bottom of the combustion chamber lining (5) with the supplied cleaning tool.
7. Using the supplied cleaning tools and without moving the combustion chamber stones, carefully pull out the combustion residue from the secondary combustion chamber (1) in the ash compartment (3).
8. Using the supplied cleaning tools, pull the combustion residue out of the ash compartment (3) into the ash pan (4).
9. Empty the combustion residue into a fireproof container.
10. Close the boiler in the reverse order.

✓ The secondary combustion chamber and the ash compartment have been cleaned.

Checking and cleaning the lambda sensor

Important!

✎ Observe the "Generally applicable safety instructions" in this section.

1. Allow the fire in the boiler to burn out and cool off.

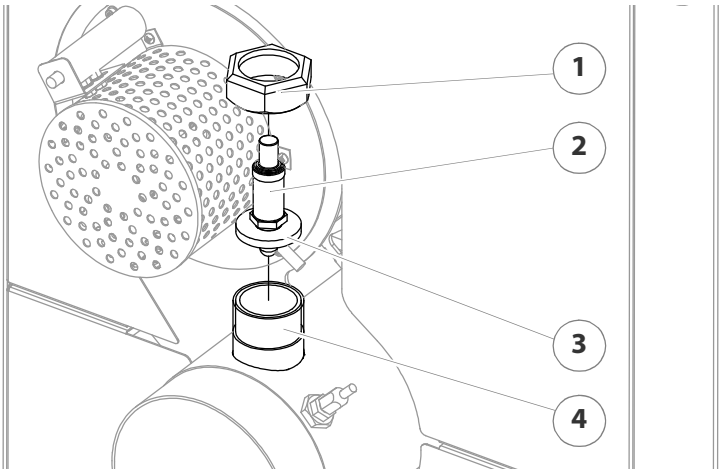

Figure 7/4 - Cleaning the lambda sensor

2. Unscrew the union nut (1) with a pipe wrench.
3. Remove the lambda sensor (2) and the steel washer (3) under it from the connection nozzle (4) of the flue gas pipe.

Important!

Steel bristles will damage the lambda sensor.

4. Clean the lambda sensor (2) with a vacuum cleaner.
5. Clean out any deposits inside the connection nozzle (4).

Important!

When reinstalling the lambda sensor, make sure its seal is intact.

Use a pipe wrench to tighten the union nut. Do not tighten the lambda sensor excessively. Never tighten the lambda sensor by the shaft body.

6. Reinstall the lambda sensor (2) in the reverse sequence.
7. Check the lambda sensor (2) for a secure fit.
8. Carefully tighten the lambda sensor (2) with a 22 mm spanner.

✓ The lambda sensor has been checked and cleaned.

CLEANING THE FLUE GAS TEMPERATURE SENSOR

Important!

✎ Observe the “Generally applicable safety instructions” in this section.

1. Allow the fire in the boiler to burn out and cool off.

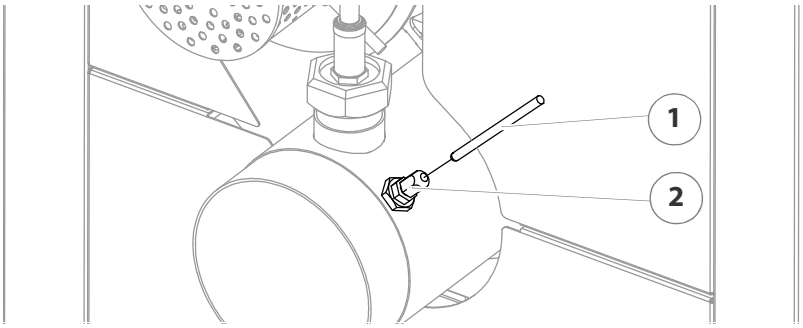

Figure 7/5 - Cleaning the flue gas temperature sensor

2. Loosen the M10 union nut (SW 17) (2) and pull the flue gas temperature sensor (1) out of the clamp screw connections.
3. Clean the sensor surface with a moist cloth.

The flue gas temperature sensor must be installed so that the sensor element projects approx. 2 cm out of the clamp screw.

4. Mount the flue gas temperature sensor (1) in the reverse sequence.

✓ The flue gas temperature sensor has been cleaned.

Cleaning the flue gas pipe

Important!

✎ Observe the "Generally applicable safety instructions" in this section.

1. Allow the fire in the boiler to burn out and cool off.

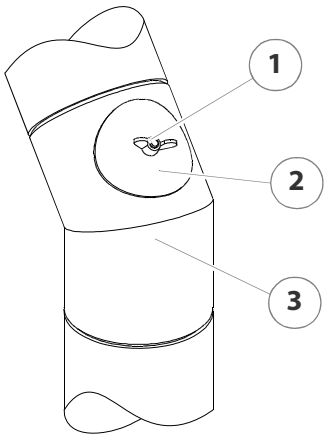

Figure 7/6 - Clean the flue gas pipe

2. Unscrew the wing nut (1) on the inspection hatch cover (2).
3. Remove the inspection hatch cover (2) from the flue gas pipe (3).
4. Check whether the flue gas pipe (3) needs cleaning.
5. If necessary, extract the ash from the flue gas pipe (3) using a vacuum cleaner.
6. Sweep any deposits into the flue gas collection box, but not in the direction of the boiler.
7. Screw the inspection hatch (2) securely back onto the flue gas pipe (3) with the wing nut (1).

✓ The cleaning of the flue gas pipe is completed.

Cleaning the cleaning system, heat exchanger surfaces and flue gas flap

Important!

✎ Observe the "Generally applicable safety instructions" in this section.

Caution!

Risk of injury from automatically driven components

Working on the flue gas fan can lead to hand injuries due to the moving parts.

Disconnect the boiler from the power mains when working on the flue gas fan.

1. Allow the fire in the boiler to burn out and cool off.

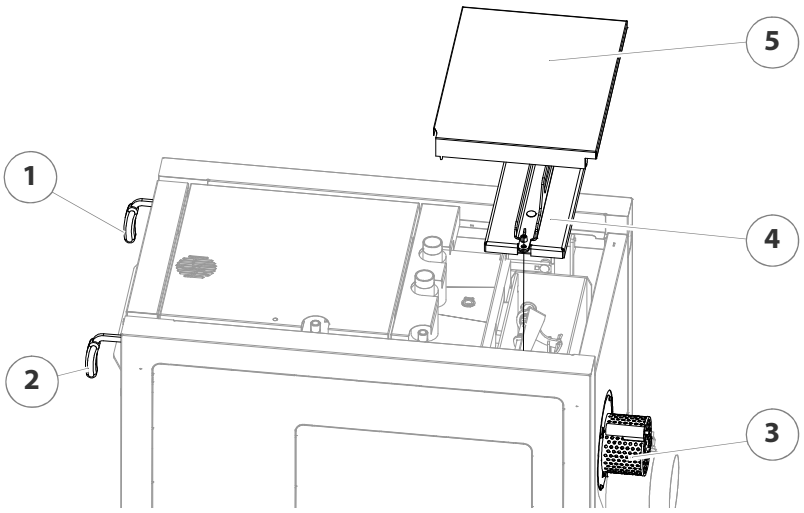

Figure 7/7 - Dismantling the cleaning shaft lid

2. Disconnect the plug from the flue gas fan (3).
3. Remove the cover of the cleaning shaft lid (5).
4. Unscrew the two M8 wing nuts and lift the cleaning shaft lid (4) up and out.
5. Open the fuel chamber door.
6. Pull the actuating handle (2) of the cleaning system several times and check whether the cleaning mechanism moves freely.
7. Pull the actuating handle (1) of the flue gas flap to the front until it latches into place.

HDG F20/25/30

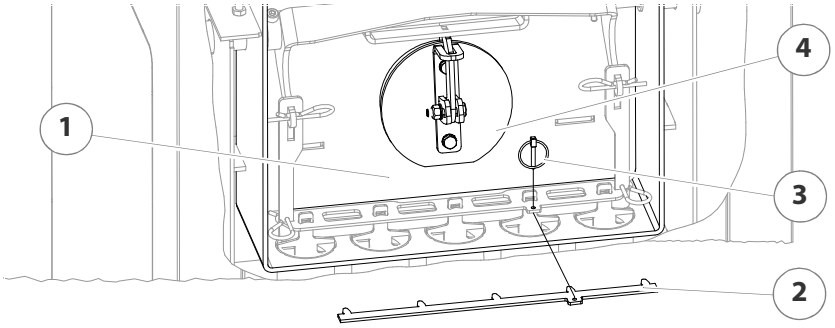

Figure 7/8 - Cleaning the flue gas flap

8. Inspect the cleaning shaft (1) for deposits.
9. If necessary, remove deposits and dust with a vacuum cleaner.
10. Clean the flue gas flap (4) and the suction channel behind it with a suitable cleaning tool (e.g. scraper) or with a vacuum cleaner.
11. Unlatch the actuating handle of the flue gas flap.
12. Remove the lynch pin (3).

13. Remove the retaining plate (2) for the turbulators.

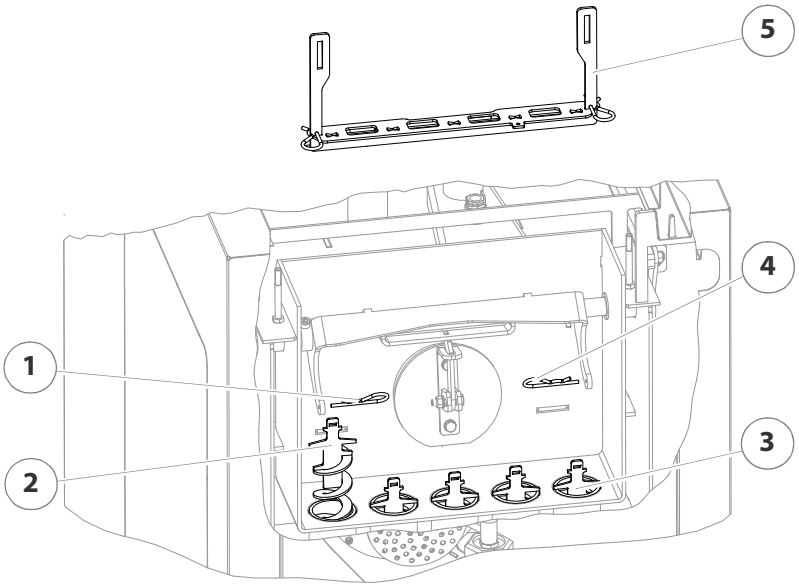

Figure 7/9 - Pulling out the cleaning turbulators

14. Pull out the two clip connectors (1 + 4).
15. Lift out the large guide crossbar (5) in an upward direction.
16. Pull out the cleaning turbulators (2) in an upward direction.

Important!

When cleaning the heat exchanger surfaces, always first push the cleaning brush all the way down and through before you pull it up again, so that the wire bristles of the brush are not bent.

17. Clean the heat exchanger pipes (3) using the round cleaning brush.
18. Mount the cleaning turbulators in the reverse sequence.
19. Close the boiler in the reverse sequence.
20. Make sure that the cleaning shaft lid is closed properly.

✓ The cleaning system, the heat exchanger surfaces and the flue gas flap have been cleaned.

HDG F40/50

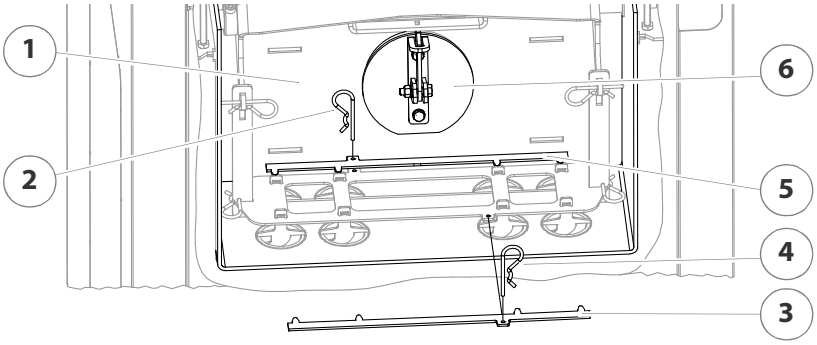

Figure 7/10 - Cleaning the flue gas flap

8. Inspect the cleaning shaft (1) for deposits.

9. If necessary, remove deposits and dust with a vacuum cleaner.
10. Clean the flue gas flap (6) and the suction channel behind it with a suitable cleaning tool (e.g. scraper) or with a vacuum cleaner.
11. Unlatch the actuating handle of the flue gas flap.
12. Remove the clip connectors (2 + 4).
13. Remove the retaining plate (3 + 5) for the turbulators.

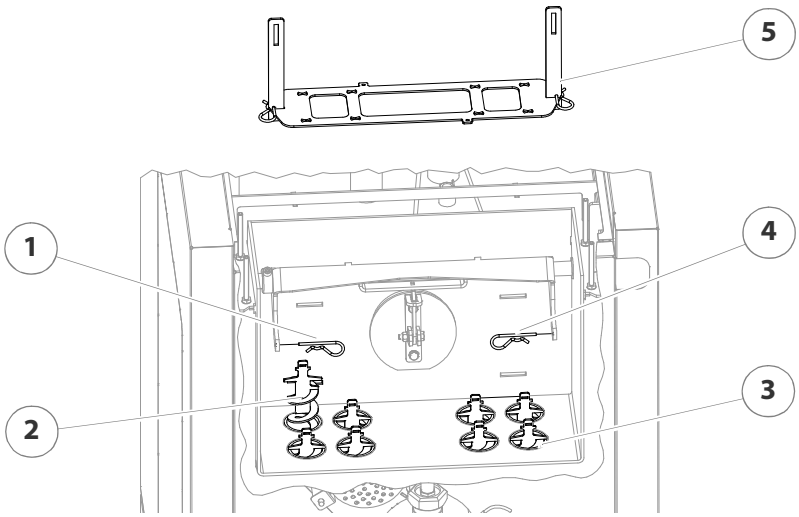

Figure 7/11 - Pulling out the cleaning turbulators

14. Pull out the two clip connectors (1 + 4).
15. Lift out the large guide crossbar (5) in an upward direction.
16. Pull out the cleaning turbulators (2) in an upward direction.

Important!

When cleaning the heat exchanger surfaces, always first push the cleaning brush all the way down and through before you pull it up again, so that the wire bristles of the brush are not bent.

17. Clean the heat exchanger pipes (3) using the round cleaning brush.
18. Mount the cleaning turbulators in the reverse sequence.
19. Close the boiler in the reverse sequence.
20. Make sure that the cleaning shaft lid is closed properly.

✓ The cleaning system, the heat exchanger surfaces and the flue gas flap have been cleaned.

Cleaning the flue gas fan

Important!

✎ Observe the “Generally applicable safety instructions” in this section.

Caution!

Risk of injury from automatically driven components

Working on the flue gas fan can lead to hand injuries due to the moving parts.

Disconnect the boiler from the power mains when working on the flue gas fan.

1. Allow the fire in the boiler to burn out and cool off.

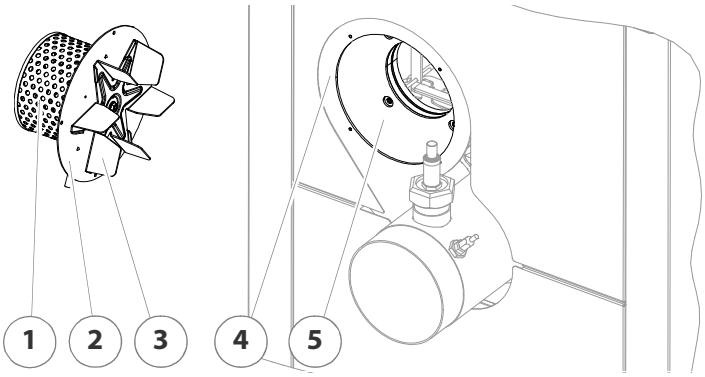

Figure 7/12 - Removing the flue gas fan

2. Disconnect the plug from the flue gas fan (1).
3. Undo the four M4 hexagon socket screws (SW3) and remove the flue gas fan (1) from the boiler.
4. Clean the flue gas collection box (5) with a vacuum cleaner.
5. Clean the fan wheel (3) and the annular gap behind it with a cleaning tool.
6. Inspect the contact surfaces (2 + 4) of the flue fan and the flue gas collection box.
7. Reinstall the flue gas fan in the reverse sequence.

✓ The flue gas fan has been cleaned.

Cleaning the air control unit

Important!

✎ Observe the “Generally applicable safety instructions” in this section.

1. Allow the fire in the boiler to burn out and cool off.

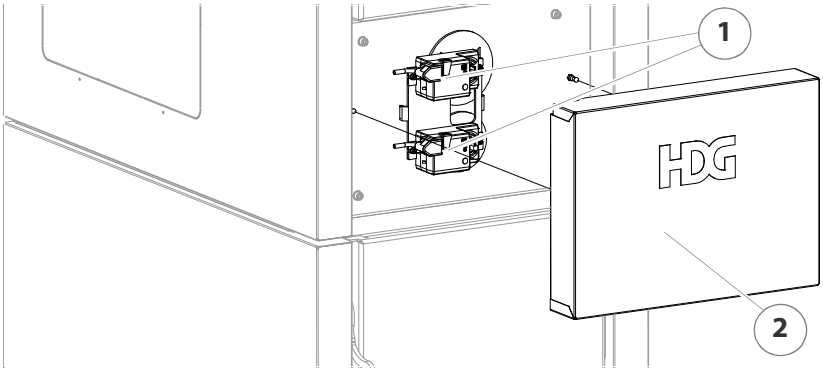

Figure 7/13 - Cleaning the air control unit

2. Pull the cladding (2) of the air regulation unit (1) carefully forwards.
3. Use a fine brush and a vacuum cleaner to remove dust deposits from the fan control unit (1).
4. Carefully press on the two rotary vanes behind the actuators and make sure that these can move.
5. Close the air control unit in reverse order.

✓ The air control unit is cleaned.

Cleaning the panels

Important!

✎ Observe the “Generally applicable safety instructions” in this section.

1. Allow the fire in the boiler to burn out and cool off.

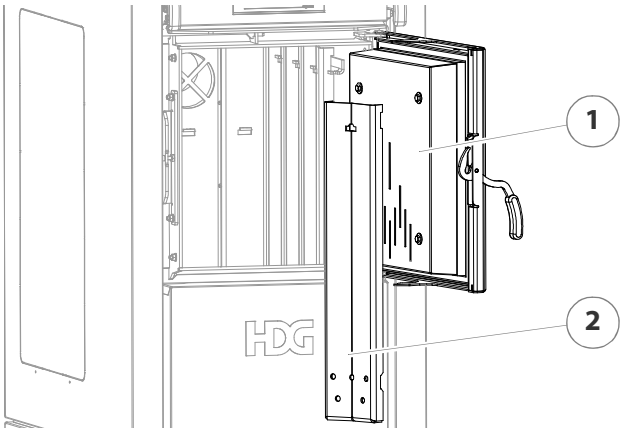

Figure 7/14 - Clean the panels

2. Open the fuel chamber door (1).
3. Unhook the side, rear and front panels (2).
4. Clean the panels (2) with the scraper.
5. Clean the fuel chamber walls with the scraper.
6. Reinstall the panels (2) in reverse order.
7. Close the fuel chamber door (1).

✓ Cleaning of the panels is complete.

Checking the doors are tight

Important!

✎ Observe the "Generally applicable safety instructions" in this section.

Fuel chamber door

1. Allow the fire in the boiler to burn out and cool off.

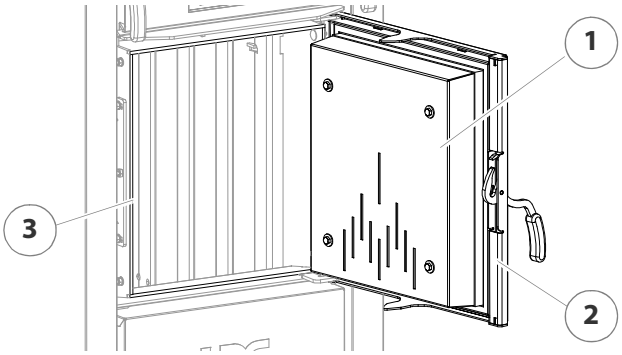

Figure 7/15 - Checking the fuel chamber door for leaks

2. Open the fuel chamber door (1).

✎ See "Cleaning the fuel chamber and secondary air openings" in this section.

3. Clamp a sheet of paper (approx. 30 cm long and 2 cm wide) between the contact surface (3) and the seal (2) of the fuel chamber door.
4. Close the fuel chamber door (1).
5. Pull on the paper.

✓ If the paper moves, the door is not properly sealed.

✓ If the paper does not move, the door is properly sealed.

6. If necessary, position the locking plate so that the door closes firmly again.
7. Repeat the procedure from step 2 to step 6 until you have inspected all four of the contact surfaces (3).
8. Remove the paper and close the fuel chamber door (1).

✓ The inspection of the fuel chamber door is complete.

Combustion chamber door

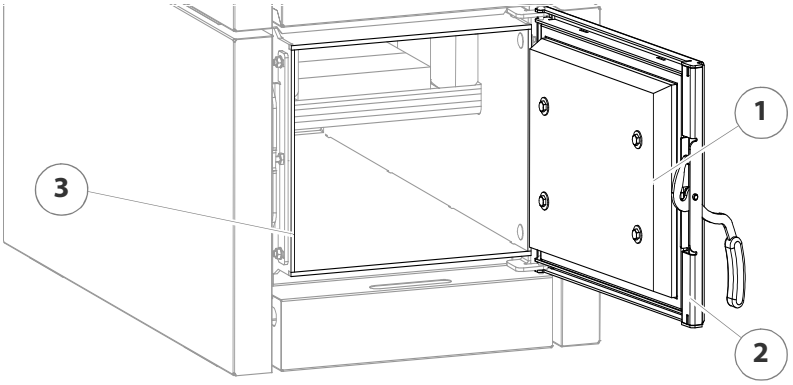

Figure 7/16 - Checking the combustion chamber door for leaks

9. Check the sealing of the ash door (1) exactly as described above under “Fuel chamber door”.

✓ The combustion chamber door has been checked for tightness.

Cleaning shaft lid

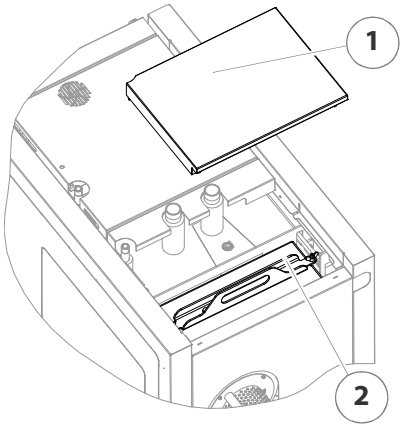

Figure 7/17 - Checking the cleaning shaft lid for leaks

10. Lift off the cover (1) of the cleaning shaft lid (2).
11. Make sure that the cleaning shaft lid (2) does not leak.
12. If necessary, tighten the two M8 wing nuts.

✓ The inspection of the cleaning shaft lid seal is complete.

Cleaning the ignition fan

The ignition fan is only available in connection with the HDG automatic ignition system.

Important!

✎ Observe the “Generally applicable safety instructions” in this section.

Caution!

Danger of burns from hot surfaces

The hot air nozzle of the ignition fan becomes very hot during operation. Even when turned off, it only cools down slowly.

Switch the heating system off and only start with the cleaning and maintenance work once the hot air nozzle has cooled down.

1. Switch the heating system off.

✎ See the “HDG controls” operating manual, chapter “5 Using the control unit”, section “5.3 Switching off the heating system”.

2. Allow the fire in the heating system to burn out and cool down.

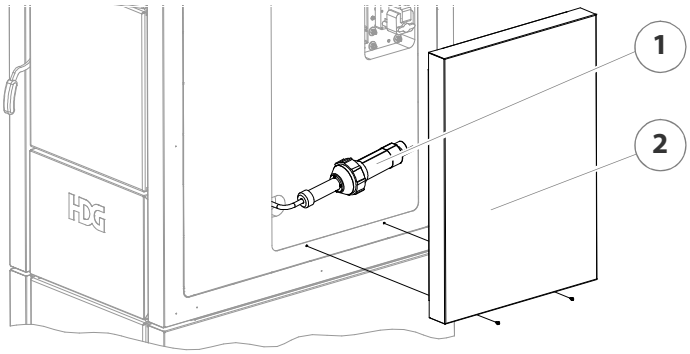

Figure 7/18 - Removing the cover

3. Undo the fastening screws and remove the side cover (2).
4. Pull the ignition fan (1) out of the retainer.

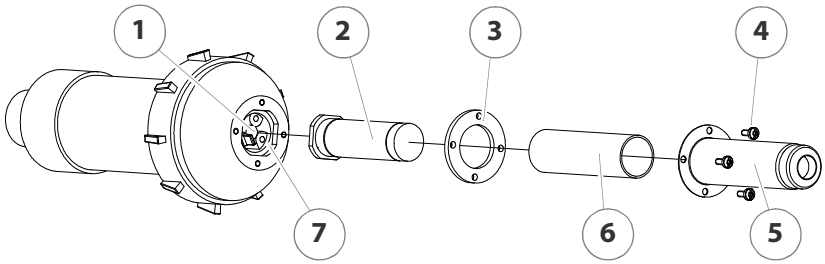

Figure 7/19 - Checking and cleaning the ignition fan

5. Unscrew the four M4 stainless steel slotted screws (4) of the hot air nozzle (5).
6. Pull off the hot air nozzle (5).
7. Remove the insulating tube (6) and the seal (3).

8. Pull the heating element (2) out of the plug contacts (7).
9. Check the heating element (2) for dirt.
10. Remove any dirt by blowing it off.
11. Check the photocell (1) for dirt.
12. Remove any dirt using a cotton swab.
13. Reinstall the ignition fan into the heating system in the reverse sequence.
14. Fit the side cover.
15. Re-starting the heating system.

✓ The cleaning of the ignition fan is completed.

8 Notes on dismantling and disposal

8.1 Dismantling

Danger!

Material damage and personal injury due to incorrect dismantling

Dismantling the system requires comprehensive specialist knowledge. If the boiler is dismantled by an untrained person, injuries may occur.

Only allow authorised specialists to dismantle the system.

The boiler can be dismantled as follows:

1. Allow the fire in the boiler to burn out and cool off.

Danger!

Dangerous electrical current or voltage

The heating system can only be completely de-energised by switching off the mains circuit breaker or the emergency heating switch.

2. Switch off the heating system at the emergency heating switch or the mains circuit breaker.

✎ See chapter “6 Using the heating system”, section “6.5 Switching off the heating system for repair work”.

✓ The system has been de-energised.

✓ The control is deactivated.

3. Disconnect the boiler from the electrical power supply.
4. Once it has cooled down, drain the heating water from the system.
5. Observe the safety regulations for personnel when disconnecting the boiler from the heating system.
6. Dismantle the individual components of the boiler.

✓ The boiler has been dismantled.

8.2 Disposal

The following components are made of steel and can be recycled via a local recycling centre.

- Boiler
- Cladding

The electrical components can also be recycled via a local recycling centre.

Fibreglass, mineral wool and plastic parts should be brought to the relevant waste disposal centres.

Oily or greasy components and condensers may only be disposed of through a specialist waste disposal centre.

9 Declaration of Conformity

EC Declarationof Conformity

in accordance with Section A of Part 1 of Annex II of the EC Directive 2006/42 on machinery

Producer:
HDG Bavaria GmbH, Heating system for wood
Siemensstraße 22
D-84323 Massing

Resident of the EC authorized to assemble the adequate technical documentation:
Stefan Holfelder
HDG Bavaria GmbH, Heating system for wood
Siemensstraße 22
D-84323 Massing

Description and identification of the machinery:

Product:	HDG F
Type:	HDG F10-50

We definitely declare hereby that the machinery complies with each and every relevant provision of the following EC Directives:

2006/42/EC:2006-05-17	EC Directive on machinery 2006/42/EC
2006/95/EC:	(Low Voltage Directive) Directive of the European Parliament and of the Council of 12 December 2006 on the harmonisation of the laws of Member States relating to Electrical Equipment designed for use within certain voltage limits (codified version) (1)
2004/108/EC:	Directive 2004/108/EC of the European Parliament and of the Council of 15 December 2004 on the approximation of the laws of the Member States relating to electromagnetic compatibility and repealing Directive 89/336/EEC
97/23/EC:	(Pressure Equipment) Directive 97/23/EC on the approximation of the laws of the Member States concerning pressure equipment

In accordance with section 2 of article 7 the applied harmonized regulations are to be found under:

EN 60335-1:2002	Household and similar electrical appliances Safety - Part 1: General requirements
EN ISO 12100-1:2003-11	Safety of machinery — Basic concepts, general principles for design - Part 1: Basic terminology, methodology
EN ISO 12100-2:2003-11	Safety of machinery — Basic concepts, general principles for design - Part 2: Technical principles
EN 60204-1:2006-06	Safety of Machinery - Electrical Equipment of Machines - Part 1: General requirements
EN ISO 14121-1:2007	Safety of machinery –Risk assessment - Part 1: Principles (ISO 14121-1:2007)

Further technical standards and specifications applied are to be found under:

EN 303-5:1999	Part 5: Heating boilers for solid fuels, hand and automatically fired, nominal heat output of up to 300 kW. Terminology, requirements, testing and marking

Massing, 28.08.2014

Place, date

Signature
Martin Ecker
CEO

10 Index

HDG Bavaria GmbH
Heizsysteme für Holz
Siemensstraße 22
D-84323 Massing
Tel. +49(0)8724/ 897-0
info@hdg-bavaria.com
www.hdg-bavaria.com

Art.Nr. 9980001706 - V 02 - en - 05/2016 - Translation of the original operating instructions